SmartGen

MAKING CONTROL SMARTER

HVR610

DIGITAL VOLTAGE REGULATOR

USER MANUAL

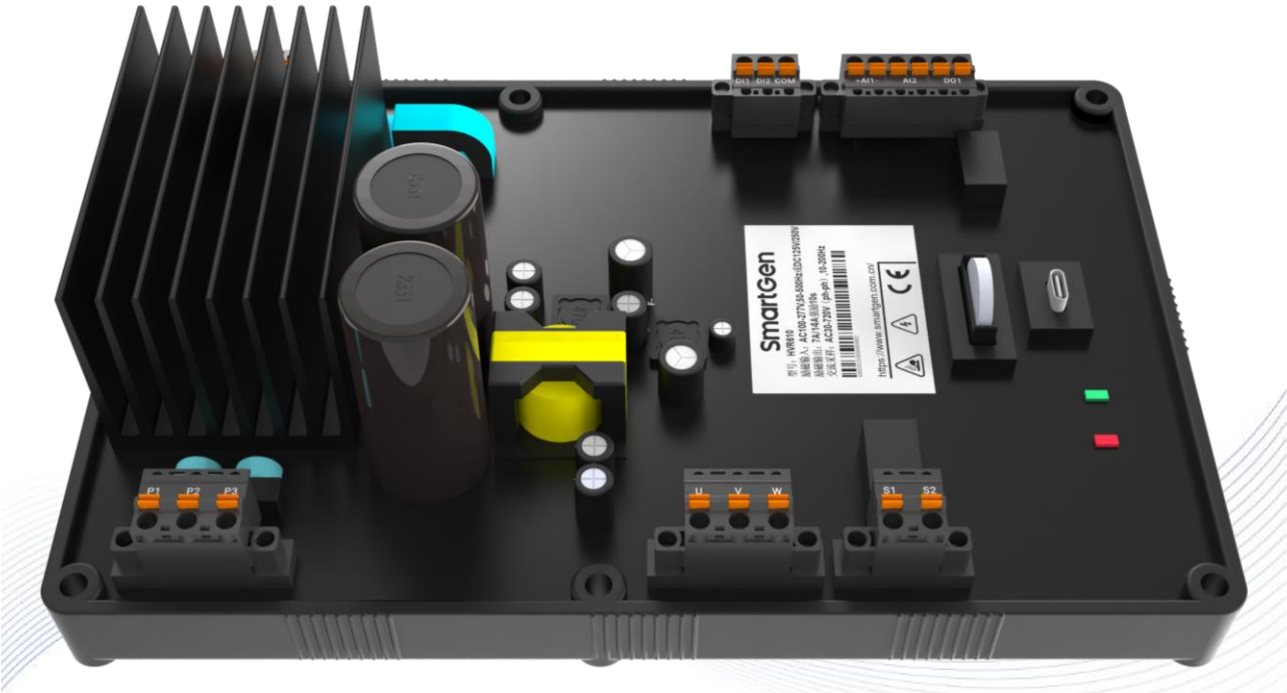

郑州众智科技股份有限公司
SMARTGEN(ZHENGZHOU)TECHNOLOGY CO.,LTD.

SmartGen Registered trademark
No. 28 Xuemei Street, Zhengzhou, Henan, China
Tel: +86-371-67988888/67981888/67992951
+86-371-67981000(overseas)
Fax: +86-371-67992952
Web: www.smartgen.com.cn/
www.smartgen.cn/
Email: sales@smartgen.cn

All rights reserved. No part of this publication may be reproduced in any material form (including photocopying or storing in any medium by electronic means or other) without the written permission of the copyright holder.
SmartGen reserves the right to change the contents of this document without prior notice.

Table 1 Software Version

Date	Version	Note
2025-04-15	1.0	Original Release

SmartGen

Table 2 Symbol Instruction

Symbol	Instruction
NOTE	Highlights an essential element of a procedure to ensure correctness.
CAUTION	Indicates a procedure or practice, which, if not strictly observed, could result in damage or destruction of equipment.
WARNING	Indicates a procedure or practice, which could result in injury to personnel or loss of life if not followed correctly.

SmartGen

CONTENTS

1 OVERVIEW 6
2 MODEL COMPARISON 7
3 PERFORMANCE AND CHARACTERISTICS 8
4 SPECIFICATION 9
5 OPERATION 11
5.1 ILLUSTRATION 11
5.1.1 INDICATOR AND WIRING 11
5.1.2 EXCITATION POWER INPUT 12
5.1.3 EXCITATION OUTPUT 13
5.1.4 GEN VOLTAGE DETECTION INPUT 13
5.1.5 GEN CURRENT DETECTION 14
5.1.6 ANALOG INPUT 15
5.1.7 DIGITAL INPUT 16
5.1.8 DIGITAL OUTPUT 16
5.2 EXCITATION REGULATION 17
5.2.1 SCHEMATIC DIAGRAM 17
5.2.2 START 17
5.2.3 AUTOMATIC VOLTAGE REGULATION (AVR) 19
5.2.3.1 ILLUSTRATION 19
5.2.3.2 U/F SLOP CHARACTERISTIC 20
5.2.3.3 DROOP CONTROL 20
5.2.3.4 TRANSMISSION LINE DROP COMPENSATION 21
5.2.3.5 LOAD COMPENSATION 21
5.2.3.6 RUNNING PROCESS 22
5.2.4 FIELD CURRENT REGULATION MODE (FCR) 22
5.2.5 REACTIVE POWER REGULATION MODE (VAR) 23
5.2.6 POWER FACTOR REGULATION MODE (PF) 24
6 PROTECTION AND LIMIT 26
6.1 WARNING ALARMS 26
6.2 FAULT ALARMS 28
6.3 UNDER EXCITATION LIMIT 30
6.4 OVER EXCITATION LIMIT 30
6.5 STATOR CURRENT LIMIT 32
7 PARAMETER RANGE AND DEFINITION 34
7.1 PARAMETER SETTING CONTENT AND RANGE 34
7.2 DEFINED CONTENTS OF PROGRAMMABLE OUTPUT 1 43
7.2.1 DEFINED CONTENTS TABLE OF PROGRAMMABLE OUTPUT 1 43
7.2.2 DEFINED COMBINATION OUTPUT 44

7.3 DEFINED CONTENTS OF DIGITAL INPUT 1-2 46
8 PARAMETER SETTING 47
9 REAL-TIME DATA ANALYSIS 48
10 COMMISSIONING 49
11 TYPICAL APPLICATION 50
12 INSTALLATION 51
12.1 OVERALL AND INSTALLATION DIMENSION 51
12.2 INSTALLATION METHOD AND WAY 52
13 FAULT FINDING 54
14 APPENDIX 1 SYMBOL AND TERM DEFINITION 55

SmartGen

1 OVERVIEW

HVR610 Digital Voltage Regulator is used to adjust the field current of brushless AC synchronous generator. It has four excitation regulation modes: automatic voltage regulation (AVR), field current regulation (FCR), reactive power regulation (VAR), power factor regulation (PF).

The product uses 32-bit micro-processor technique which can achieve precision measurement, protection threshold adjusting, real-time data monitoring and analysis, flexible and comprehensive fault protection, etc. All parameters can be read and configured through USB interface via PC. It can be widely used in all types of brushless AC synchronous generators like PMG, AUXW, SHUNT, etc. for its compact structure, simple connections and high reliability.

SmartGen

2 MODEL COMPARISON

Table 3 Software Version

Item		**HVR610**	HVR1000	HVR620	HVR410
Excitation Regulation Mode	AVR Mode	●	●	●	●
	FCR Mode	●	●		
	VAR Mode	●	●		
	PF Mode	●	●		
Generator Voltage Detection		●	●	●	●
Generator Current Detection		●	●		●
Excitation Power		DC63V system: AC(100-139)V or DC125V; DC125V system: Single phase for AC(190-277)V, three phases for AC(190-260)V or DC250V		DC63V system: AC(100-139)V or DC125V; DC125V system: AC(190-277)V, or DC250V	AC(100-264)V
Excitation Current		7A (short-time current: 10s, 14A)	7A (short-time current: 10s, 14A)	4A (short-time current: 10s, 7.5A)	4A (short-time current: 10s, 7.5A)
Analog Input	Voltage input	●	●		●
	Resistance input	●	●		●
No. of Inputs		2	4		
No. of Outputs		1	2		
Rated Voltage Potentiometer				●	●
Communication Interface	Bluetooth		●		
	CAN		●	●	
	USB	●	●	●	●
Temperature Protection	Winding			●	
	Heat Sink			●	●
Real-time Clock		●	●		
Event log		●	●	●	●
Running Data Record		●	●		
Alarm Data Record (Black Box)		●	●	●	●

⚠NOTE: The functions of HVR1000, HVR620 and HVR410 controllers mentioned in this manual are subject to change. For accurate information, please refer to the product user manual.

3 PERFORMANCE AND CHARACTERISTICS

Main characteristics are as following:

- Four excitation regulation modes: automatic voltage regulation (AVR), field current regulation (FCR), power factor regulation (PF), reactive power regulation (VAR);
- Over-excitation limit, under-excitation limit, stator current limit, U/F limit function is fitted;
- Soft start function is fitted for automatic voltage regulation (AVR) and field current regulation (FCR) modes;
- PID algorithm for excitation regulation and parameters of four modes are independent;
- Adjusting output target value via digital input, analog voltage input and analog resistance input;
- The secondary rated current of current transformer can be set as 5A or 1A;
- Under the voltage of 63V or 125V, it can continuously provide 7A current (70°C of room temperature) or 10A current (55°C of room temperature). The maximum short-time current lasts for 10s with 11A (70°C of room temperature) or 14A current (55°C of room temperature);
- With load compensation function (LCF);
- Droop function enables parallel generator to distribute reactive power automatically;
- With transmission line drop function;
- With 2-way programmable digital inputs, 1-way digital outputs, 1-way (-10–10)V analog voltage input, 1-way (0-600)Ω analog resistance input;
- Adapt to AC systems of 3P3W, 3P4W, 2P3W and 1P2W, rated frequency range is 10Hz–200Hz;
- Detect generator voltage harmonic THDu, generator current harmonic THDi, and 1st-15st harmonic;
- The generated voltage and current are measured as true RMS values;
- Collect and display excitation voltage, current, generator voltage, current, frequency, power and other parameters;
- Real-time data curve analysis can be realized by PC software;
- Protection and detection function: gen over/under voltage, over/under frequency, unbalanced voltage, high THD, gen unavailable, excitation over voltage, excitation overcurrent, rotating diode fault, etc.;
- If enabled, alarm detection function of gen overcurrent, short circuit, over power, reverse power, low power factor, loss of excitation, unbalanced current, current waveform distortion high, etc. is fitted for current transformer;
- All parameters can be configured through USB interface via PC;
- Suit for all types of brushless AC synchronous generators like PMG, AUXW, SHUNT, etc.;
- With running data record function. Voltage regulator can record running data once per second and 8192 pieces in total that can be saved as CSV file via PC;
- Event log, real-time clock, can loop record 999 events;
- Black box function enables to loop record 5 groups of fault alarm data;
- Modular design, pluggable terminal, screw fixing mounting, compact structure and easy installation.

smartgen

4 SPECIFICATION

Table 4 Technical Parameters

Items	Contents
Excitation Power	DC63V system: AC(100-139)V or DC125V 500W at 7A current, 720W at 10A current DC125V system: Single phase for AC(190-277)V, three phases for AC(190-260)V or DC250V 920W at 7A current, 1320W at 10A current Frequency: (50-500)Hz or DC
Power Consumption	<40W
Excitation Output Current	Rated voltage: 63V or 125V Continuous current: 7A for 70°C of room temperature, 10A for 55°C of room temperature Maximum short-time current: 10s, 11A for 70°C of room temperature, 14A for 55°C of room temperature Coil resistance>4Ω
AC Voltage	Accuracy: 0.25%THDu<5%
AC Sampling Voltage	Line voltage Range: AC30V - AC720V (ph- ph) Resolution: 0.1V Accuracy: 0.2%
	AC frequency Range: 10Hz - 200Hz Resolution: 0.01Hz Accuracy: 0.1Hz
	AC current Rated: 5A or 1A Range: 0A - 15A (rated 5A) or 0A - 3A (rated 1A) Resolution: 0.1A Accuracy: 0.5%
Analog Input	Resistance input Range: 0Ω - 6000Ω Resolution: 0.1Ω Accuracy: 1Ω (below 2000Ω)
	Voltage input Range: -10V - 10V Resolution: 0.001V Accuracy: 1%
Digital Output	5A AC250V volt-free output (relay output)

Items	Contents
Digital Input 1-2	Low on-threshold voltage 1.2V
Vibration	(18-2000)Hz: 5g IEC 60068-2-6
Shock	$50g_n$, 11ms, half-sine, apply three shocks successively in each direction of three mutually perpendicular axes of the specimen, which means 18 shocks in total IEC 60068-2-27
Bump	25g, 16ms, half-sine IEC 60255-21-2
Overall Dimension	239mm x 154mm x 71mm
Working Temperature	(-40~+70)°C
Working Humidity	(20~93)%RH
Storage Temperature	(-40~+80)°C
Weight	1.39kg
Installation	Fixed by screws
IP Rating	IP20

SmartGen

5 OPERATION

5.1 ILLUSTRATION

5.1.1 INDICATOR AND WIRING

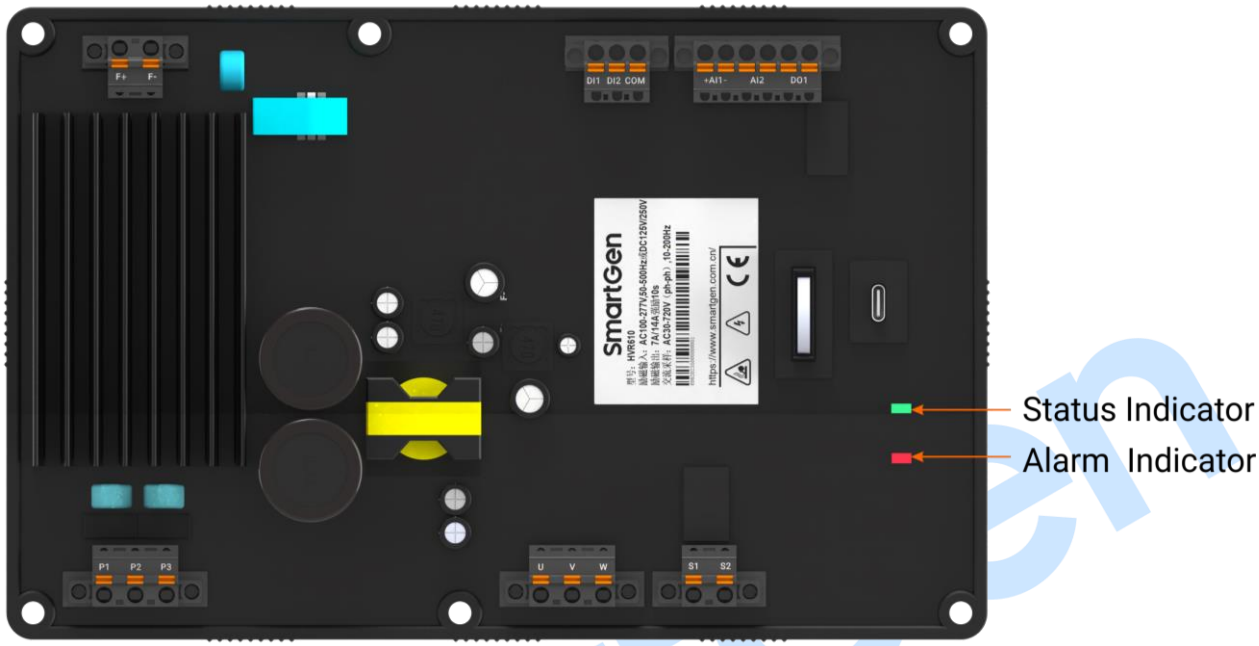

Fig. 1 Top View of HVR610

Table 5 Indicator Description

Indicator	Function	Description
Alarm (red)	Alarm	When there is critical alarm, it flashes rapidly (5 times/s); When there is general alarm, it flashes slowly (once/s); When there is no alarm, it extinguishes.
Status (green)	Status	When power is normal, it is always illuminated; When warning or fault is detected, it flashes slowly (once/s).

Table 6 Terminal Wiring Description

No.	Function		Size	Remarks
F+	Positive Pole		1.5mm^2	Excitation output.
F-	Negative Pole		1.5mm^2	
D1	Digital Input 1		1.0mm^2	Active for COM connected.
D2	Digital Input 2		1.0mm^2	Active for COM connected.
COM	Digital Input COM		1.0mm^2	COM of digital inputs.
AI1	+	Analog Input 1	1.0mm^2	Voltage type analog input.
	-		1.0mm^2	
AI2	Analog Input 2		1.0mm^2	Resistance type analog input.
			1.0mm^2	
DO1	Digital Output 1		1.5mm^2	5A AC250V volt-free output (relay output).

No.	Function	Size	Remarks
		1.5mm²	
P1	Power Input P1	1.5mm²	Excitation power input.
P2	Power Input P2	1.5mm²	
P3	Power Input P3	1.5mm²	
U	Gen U-phase Monitoring	1.0mm²	Connect to gen output U phase (2A fuse is recommended).
V	Gen V-phase Monitoring	1.0mm²	Connect to gen output V phase (2A fuse is recommended).
W	Gen W-phase Monitoring	1.0mm²	Connect to gen output W phase (2A fuse is recommended).
S1	CT A-phase Monitoring	1.5mm²	Externally connect to secondary coil of current transformer (rated 5A or 1A).
S2		1.5mm²	
Device	USB	Isolated	TYPE-C, can supply power for the module and parameter configuration, real-time data monitoring and program upgrade can be realized via PC software.

NOTE: USB interface of the voltage regulator can directly connect PC to do parameter configuration in standby and running status.

CAUTION: Do not upgrade the program while the generator is running.

5.1.2 EXCITATION POWER INPUT

Excitation power supplies power for excitation control output and voltage regulator.

Its input terminals are P1, P2, P3, and can be powered by PMG, AUXW and SHUNT.

It can be powered by single phase or 3P3W. When single phase is applied, it can be powered by input terminals of anyt two excitation powers.

AC supply range: AC100V-AC277V.

Recommended min remanence voltage is AC8V.

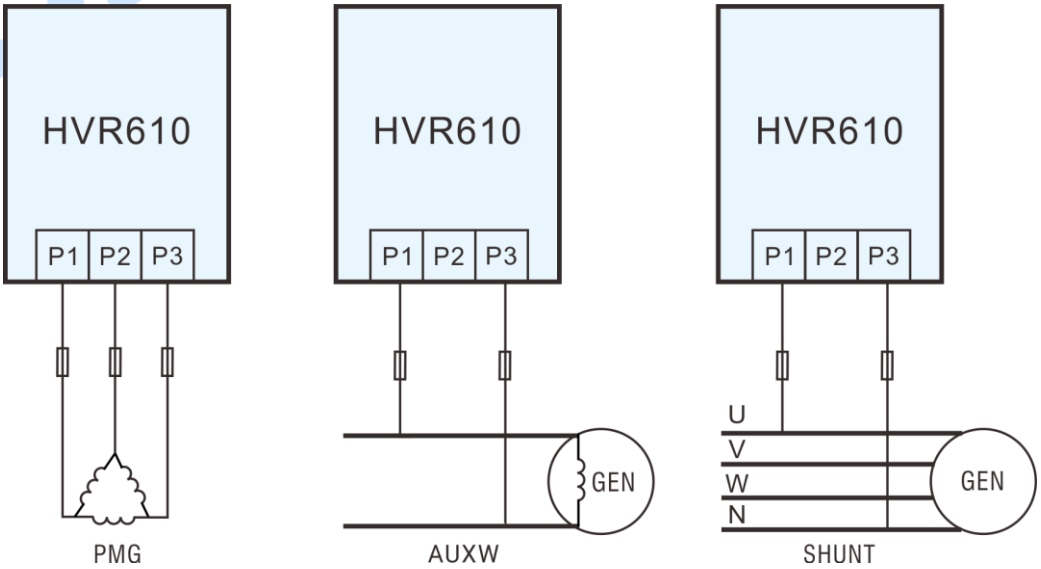

Fig.2 Wiring Diagram of Excitation Power Input

5.1.3 EXCITATION OUTPUT

Excitation output provides DC excitation power for exciter. Its output terminals are F+, F-.

It can provide 7A continuous working current at 70°C room temperature; in short circuit, maximum field current is 11A that can be provided for 10s. It can provide 10A continuous working current at 55°C room temperature; in short circuit, maximum field current is 14A that can be provided for 10s.

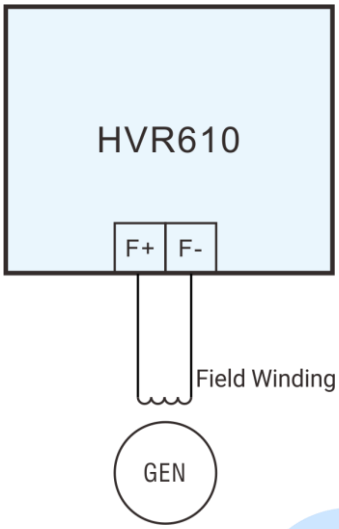

Fig.3 Wiring Diagram of Excitation Output

5.1.4 GEN VOLTAGE DETECTION INPUT

Voltage detection terminals of 3-phase generator are U, V, W.

Its AC input range is AC30V - AC720V (ph- ph).

It can set wiring method to 3-phase (U-V-W), 2-phase (V-W) through “System Setting” -> “AC Input Sampling”.

When AVR mode and 3-phase are enabled, gen voltage is the average value of 3-phase line voltage.

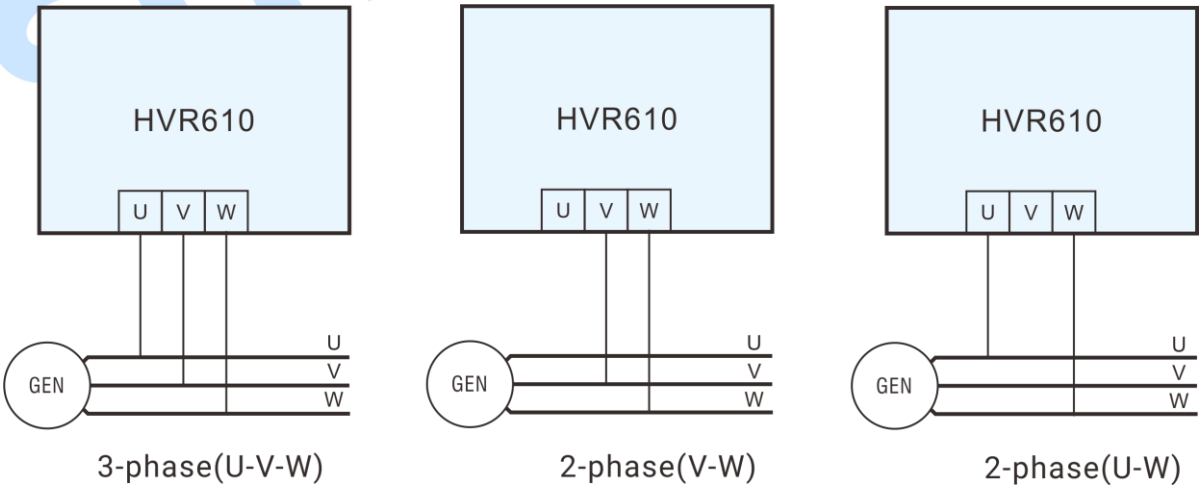

Fig.4 Wiring Diagram of Gen Voltage Detection

5.1.5 GEN CURRENT DETECTION

Gen 3-phase current detection terminals are: S1, S2.

Rated current value of CT's secondary side can be set as 5A or 1A, detection range for 5A: 0A - 15A; detection range for 1A: 0A - 3A.

When gen voltage detection is set to 3P3W (U-V-W), CT wiring can be IA or IB.

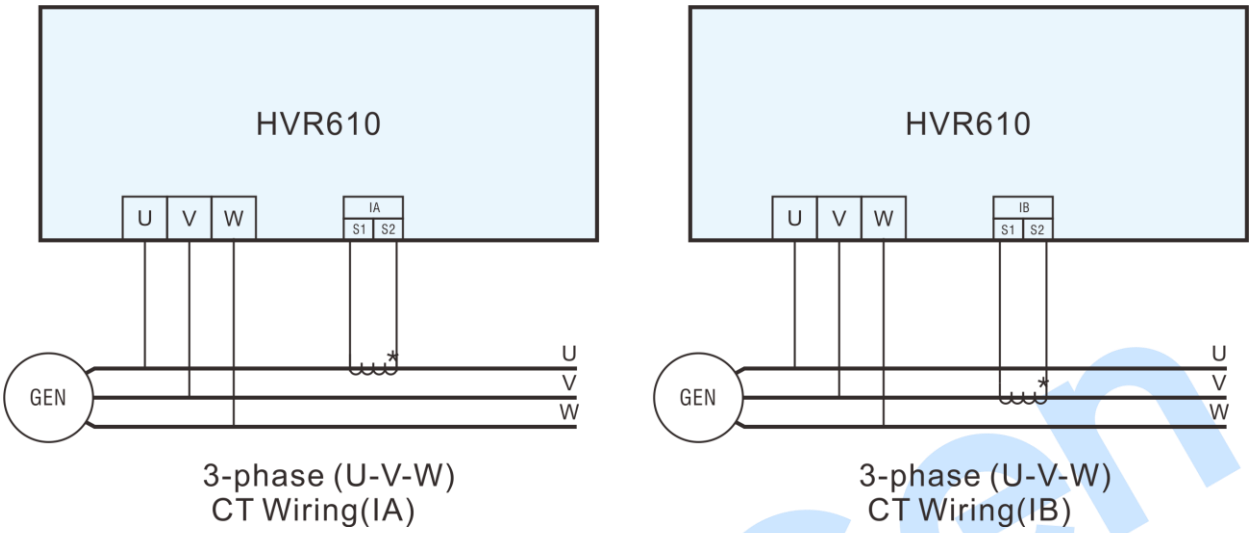

Fig.5 CT Wiring Diagram of Gen 3P3W Current Detection

When gen voltage detection is set to 2-phase (V-W), CT wiring is fixed as IA.

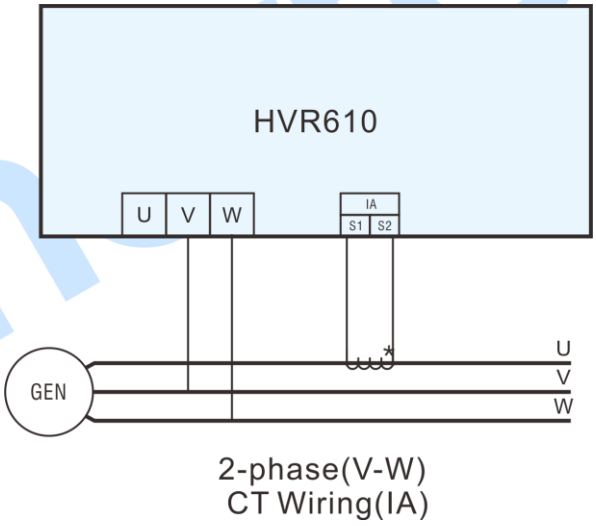

Fig.6 CT Wiring Diagram of 2-phase (V-W)

When gen voltage detection is set to 1P2W (U-W), CT wiring is fixed as IB.

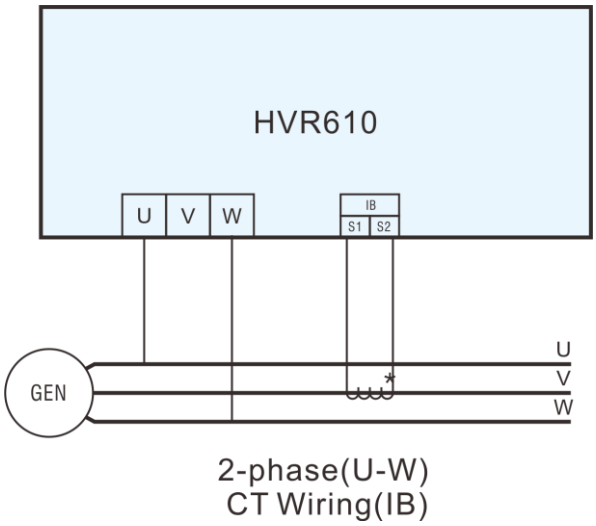

Fig.7 CT Wiring Diagram of 2-phase (U-W)

5.1.6 ANALOG INPUT

There are two analog inputs, terminal of analog input 1 (voltage type) is AI1, terminal of analog input 2 (resistance type) is AI2.

Input range of AI1 is (-10-10)V, input range of AI2 is (0-6000)Ω, (2-5)KΩ potentiometer is recommended.

NOTE: Analog inputs are all non-isolated.

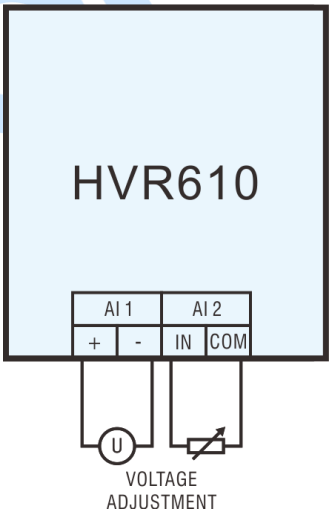

Fig.8 Wiring Diagram of Analog Input

5.1.7 DIGITAL INPUT

There are four digital inputs, all inputs are active for COM connected.

NOTE: Low on-threshold voltage is 1.6V, off-threshold voltage is 1.8V.

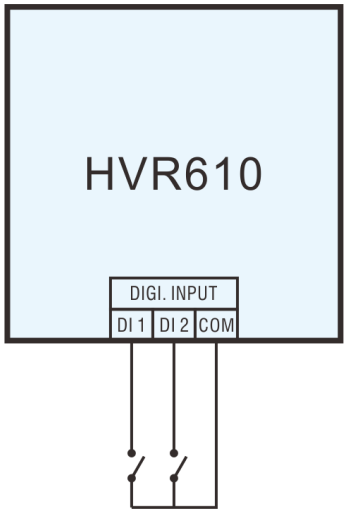

Fig.9 Wiring Diagram of Digital Input

5.1.8 DIGITAL OUTPUT

There are 1 volt-free relay output. Relay capacity is 5A AC250V.

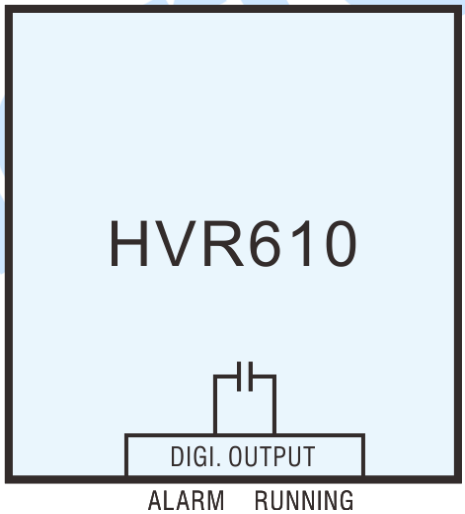

Fig.10 Wiring Diagram of Digital Output

5.2 EXCITATION REGULATION

5.2.1 SCHEMATIC DIAGRAM

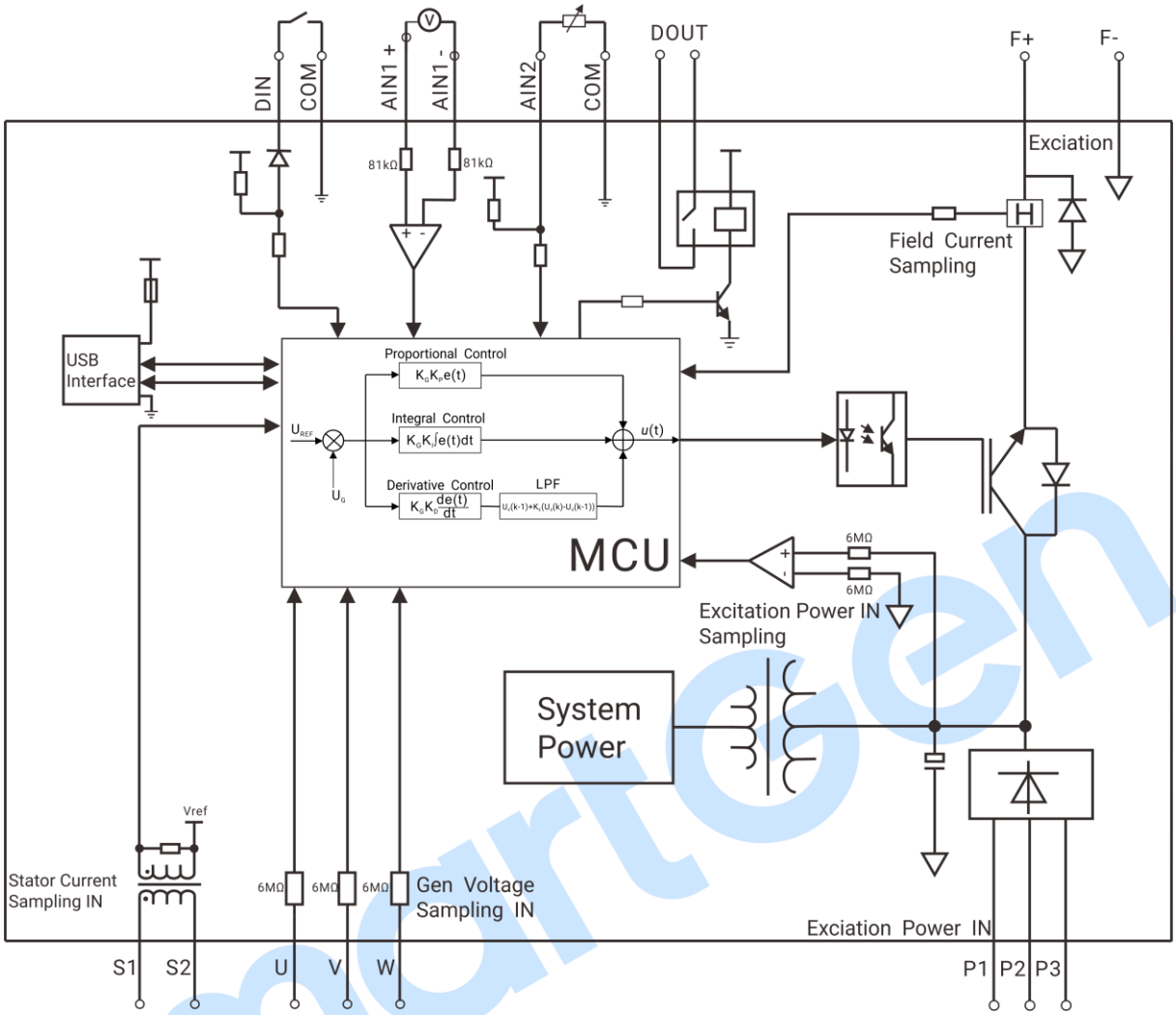

Fig.11 Schematic Diagram of HVR1000A

5.2.2 START

Soft Start

This function can control the change rate of generator terminal voltage and field current when the generator starts in automatic voltage regulation (AVR) and field current regulation (FCR) modes, as shown in soft start curve diagram.

Soft start time: (0.1~120.0)s, default 3s, it is the time from soft starting to reaching 100% target value.

Start threshold: (0.1~100.0)%, default 20%, when generator terminal voltage reaches start threshold, it starts to regulate automatically.

Initial duty cycle: (0~100.0)%, default 0, excitation regulates initial PWM value.

U/F characteristic of the generator is still active and has priority to control generator voltage during soft starting.

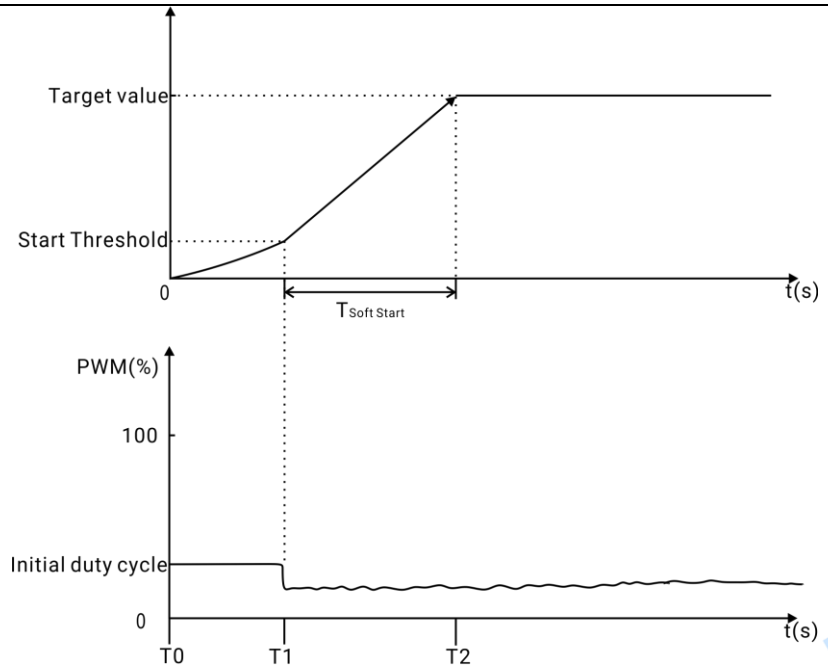

T0-T1: Initial duty cycle of regulator output
T1-T2: Soft start adjusting output (U/F characteristic is still active)

Fig.12 Soft Start Curve Diagram

Threshold Start

This function is applicable to automatic voltage regulation (AVR) mode. The voltage regulator outputs setting initial duty cycle. When the voltage regulator detects that generator terminal voltage is greater than the setting start threshold, voltage regulation takes effect. The target voltage is adjusted according to set U/F characteristic.

Excitation stop condition: when generator frequency is lower than set value, and power input voltage is lower than set supply voltage, delay the time and stop the excitation.

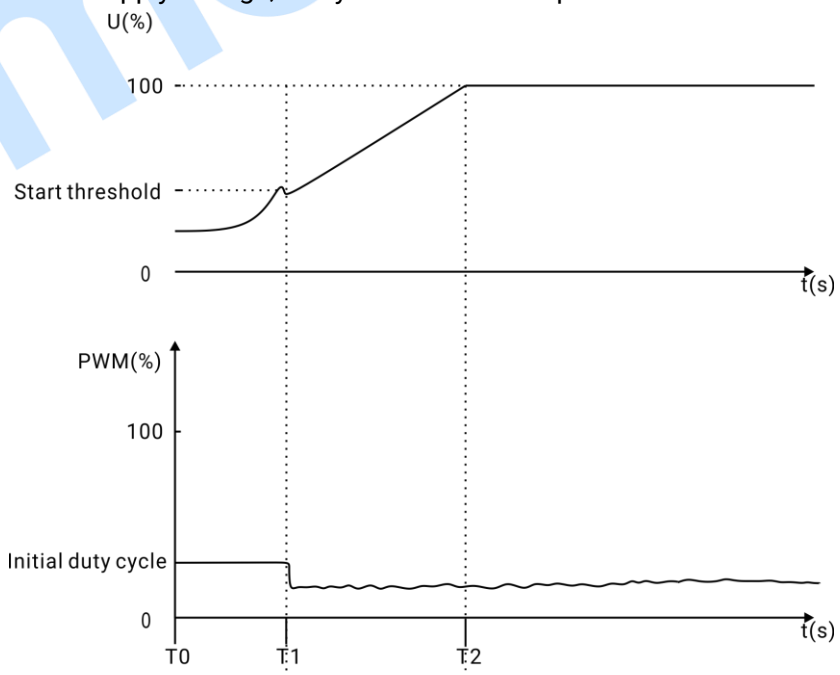

T0-T1: Initial duty cycle of regulator output
T1-T2: U/F characteristic adjusting output

Fig.13 Threshold Start Curve Diagram

5.2.3 AUTOMATIC VOLTAGE REGULATION (AVR)

5.2.3.1 ILLUSTRATION

This mode can be active via parameter configuration or AVR mode input.

There are 5 methods to adjust AVR output value:

1. Set AVR output voltage (fixed value);
2. Adjust output voltage via digital UP input or DOWN input;
3. Adjust output voltage via changing analog input voltage (-10-10)V;
4. Adjust output voltage via changing analog resistance (0-6000)Ω;

The auxiliary regulation output voltage is the average value of regulation deviation sum of the above regulation methods.

For example:

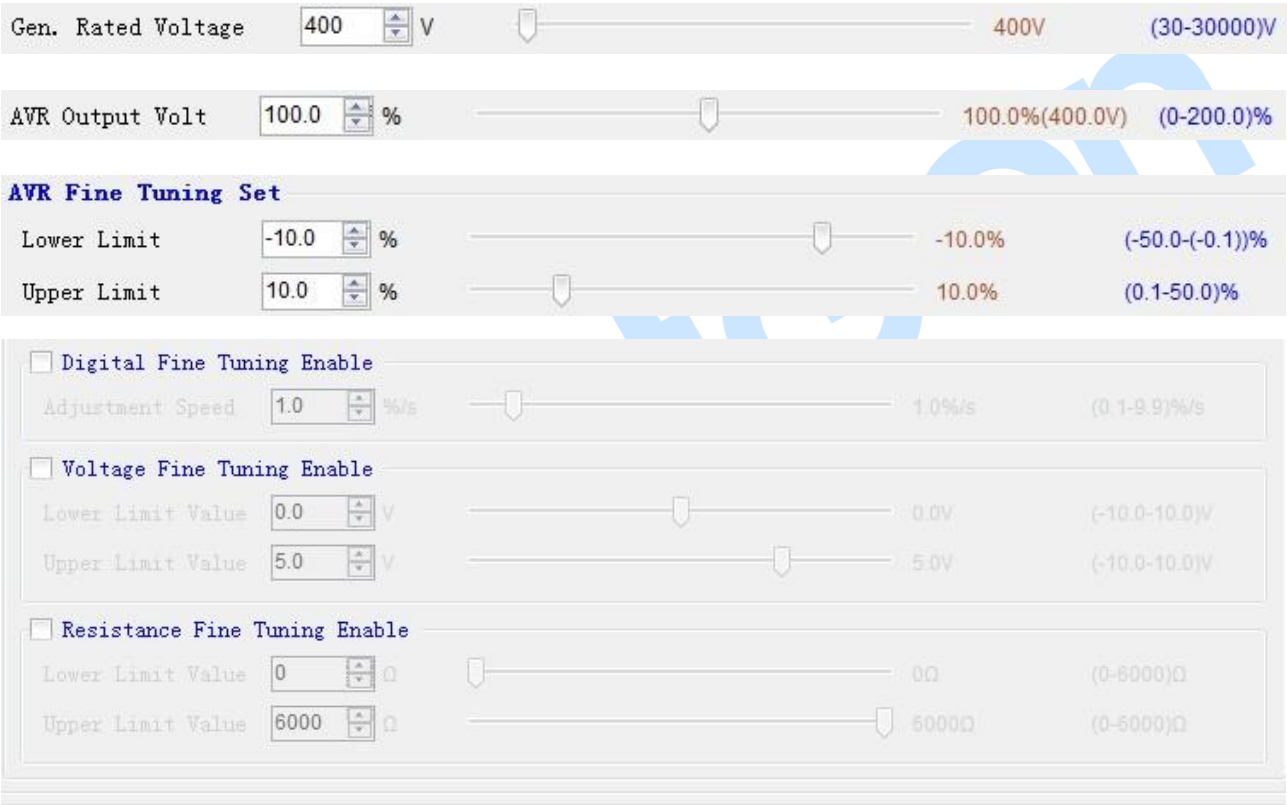

1. When voltage is fine-tuned to 1.0V:

Voltage fine-tuning deviation EV = -10%+ (10% - -10%)*1.0/(5.0-0) = -6.0%;

2. When resistance is fine-tuned to 1500Ω:

Resistance fine-tuning deviation ER = -10%+ (10% - -10%)*1500/(5000-0)= -4.0%;

3. Total deviation ET = (EV+ER)/2 = -5.0%;

Target voltage = 400*(100%+ET)= 380V.

5.2.3.2 U/F SLOP CHARACTERISTIC

Start frequency (F_{start}): (10.0~100.0)%, default 10.0%.

Knee frequency (F_{knee}): (70.0~100.0)%, default 96.0%.

U/F slope (SLOPE): (0.5~5.0)%/Hz, default 1.0. Change the rated frequency by 1%, change the rated voltage by SLOPE%. U/F characteristic diagram is shown as below.

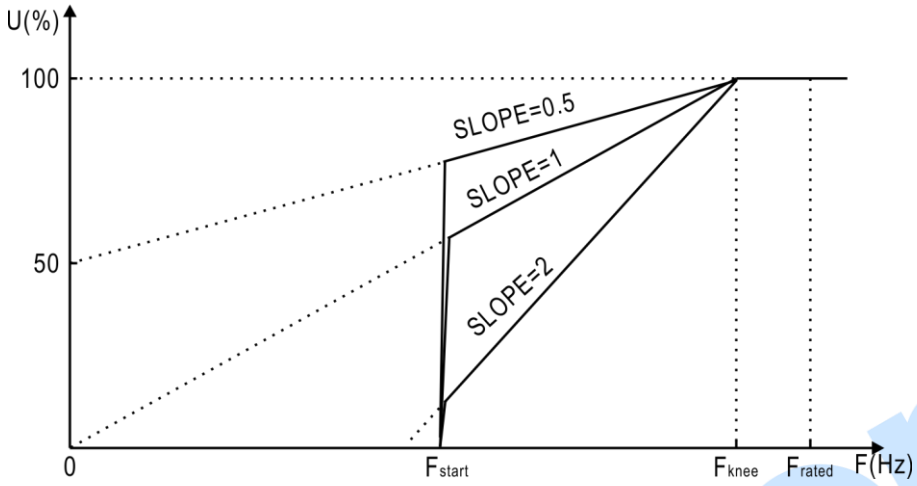

Fig.14 U/F Characteristic

5.2.3.3 DROOP CONTROL

The parallel running generator can automatically distribute reactive load via droop function.

Droop range: (0.1~10.0)%, default 3.0%.

When reactive power is 0%, target voltage keeps unchanged; when it is 100%, target voltage decreases the set compensation voltage.

For example: set droop to 5%, rated voltage to 400V, when reactive is 0%, target voltage is 400V; when reactive power is 100%, target voltage is 400*95%=380V. The droop control voltage curve is shown as below.

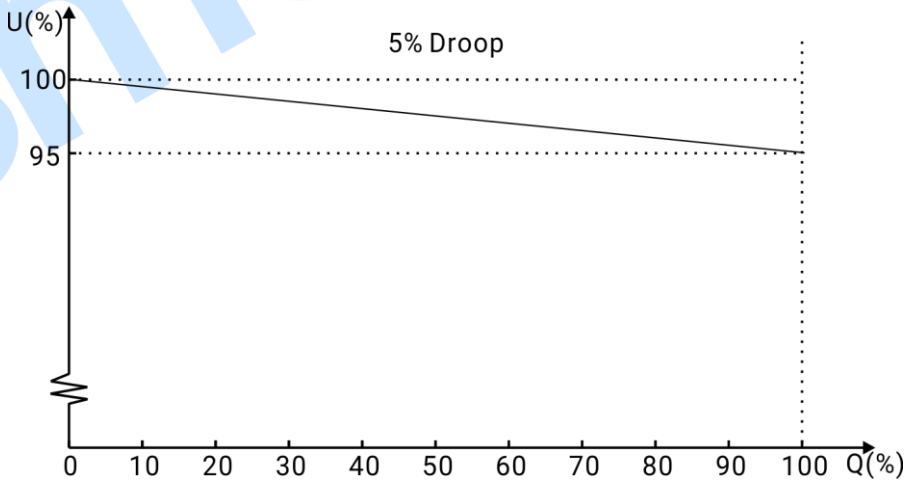

Fig.15 Droop Control Voltage Curve

5.2.3.4 TRANSMISSION LINE DROP COMPENSATION

Transmission line drop compensation range: (0.0~20.0)%, default 3.0%.

When apparent power is 0%, traget voltage keeps unchanged; when it is 100%, target voltage increases the set compensation voltage.

For example: set transmission line drop compensation to 5%, rated voltage to 400V, when apparent power is 0%, target voltage is 400V; when apparent power is 100%, target voltage is 400*105%=420V. The transmission line drop compensation voltage curve is shown as below.

This function is applicable to occasions that compensation line is long and large line voltage drop caused by load current increase.

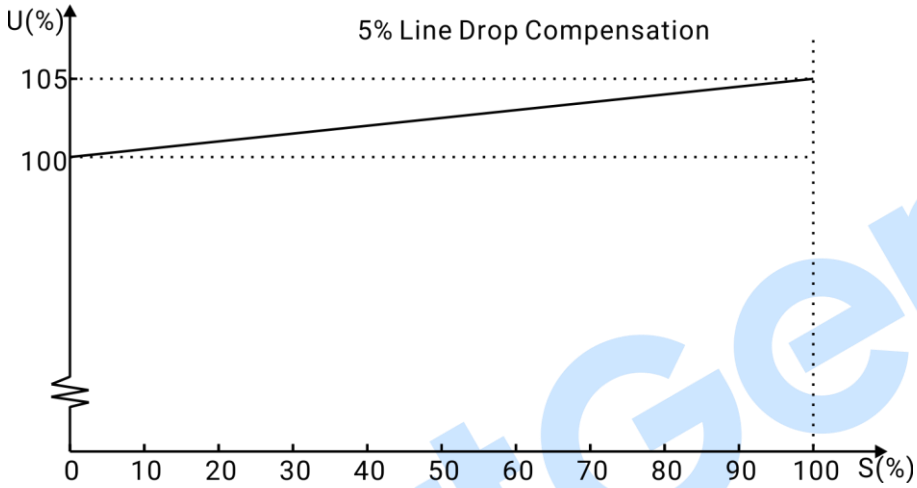

Fig.16 Transmission Line Drop Compensation Curve

5.2.3.5 LOAD COMPENSATION

Drop value (U_{lcf}): (70.0~100.0)%, default 90.0%.

Continuous delay (T_{lcf}): (0~10.0)s, default 1.0s.

Rise slope (T_{rise}): (0.0~10.0)%/s, default 0.2s/%.

When gen frequency drops to knee frequency (F_{knee}), target voltage drops to set voltage (U_{lcf}), it instantly reduces engine output power. When the frequency begins to rise, target voltage gradually rises according to T_{rise} setting, the unit's sudden loading performance is improved. When T_{lcf} delay is over, the load compensation is completed. U/F characteristic of the generator is still active and has priority to control generator voltage during load compensation.

This function is applicable to the occasion that sudden loading performance improvement by reducing the generator terminal voltage and output power in sudden loading.

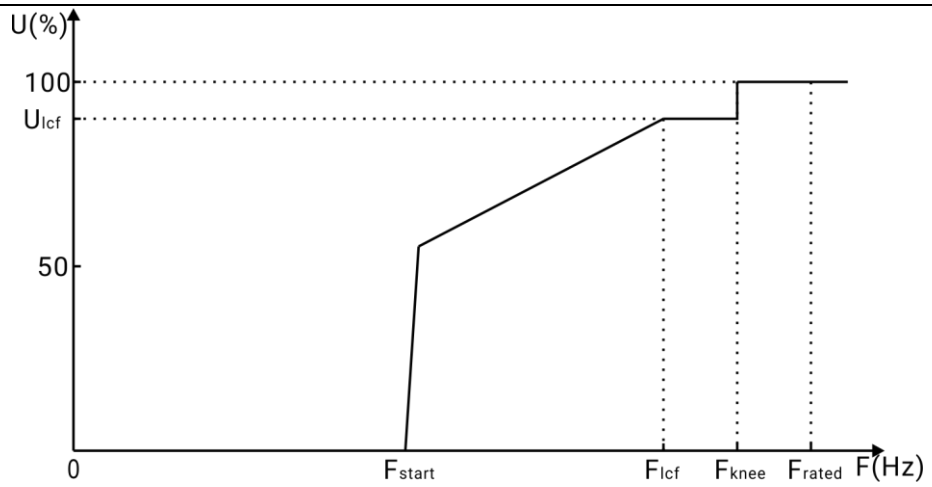

Fig.17 U/F Curve During Load Compensation

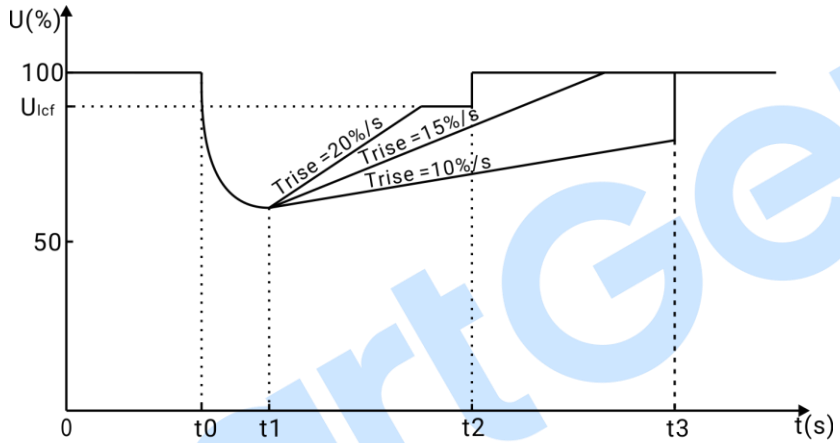

t0: Gen frequency < load compensation frequency($F<F_{lcf}$)
t1: Gen frequency > load compensation frequency($F>F_{lcf}$)
t2: Gen frequency > knee frequency ($F>F_{knee}$)
t3: End of duration ($t3=t1+T_{lcf}$)

Fig.18 Voltage/Time Curve During Load Compensation

5.2.3.6 RUNNING PROCESS

a) When generator is running, voltage regulator outputs initial duty cycle; when generator terminal voltage is higher than set start threshold voltage, soft starting begins for voltage regulation and excitation output is gradually increased;
b) After soft starting, regulate excitation output according to U/F curve; when gen frequency is higher than knee frequency, voltage regulator is adjusted with the rated voltage as the target;
c) When generator stops, excitation output is gradually stopping,; when gen frequency is lower than excitation stopping frequency, this running is finished;
d) When voltage regulator detects fault shutdown alarm, excitation output stops.

5.2.4 FIELD CURRENT REGULATION MODE (FCR)

This mode can be active via parameter configuration or FCR mode input.
FCR is prior to other regulation modes.
FCR can directly control filed current output size.
There are 4 methods to adjust FCR output value:

1. Set FCR current output (fixed value);
2. Adjust output field current via digital UP input or DOWN input;
3. Adjust output field current via changing analog input voltage (-10-10)V;
4. Set field current range, enable analog resistance fine-tuning, then adjust output field current via changing analog resistance (0-6000)Ω;

The auxiliary regulation output field current is the average value of the regulation deviation sum of the above regulation modes. If there are two ways to regulate, the regulation deviation value is equal to the sum of two regulation deviations divided by 2.

For example:

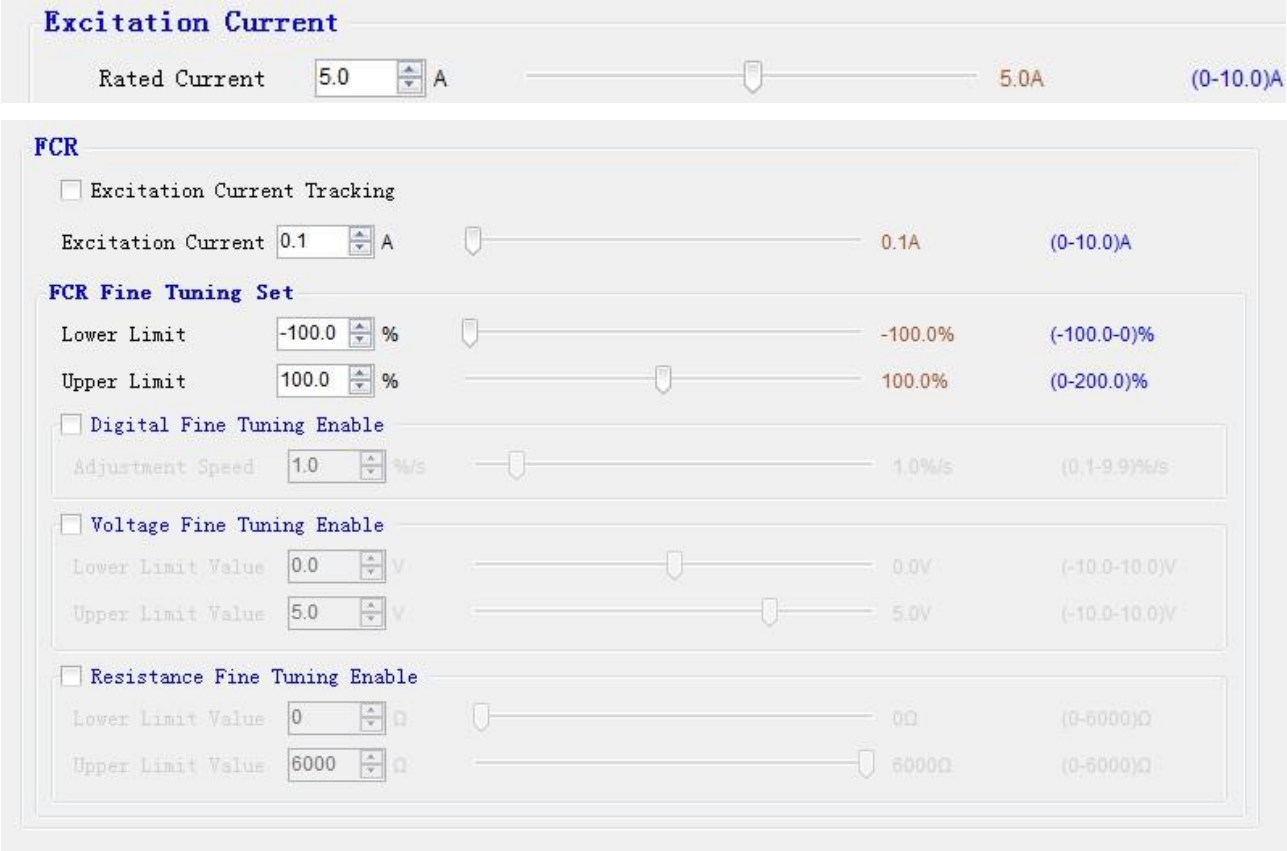

1. When voltage is fine-tuned to 4.0V:

Voltage fine-tuning deviation EV = -50%+ (50% - -50%)*4.0/(10.0-0) = -10.0%;

2. When resistance is fine-tuned to 1000Ω:

Resistance fine-tuning deviation ER = -50%+ (50% - -50%)*1000/(6000-1000)= -30.0%;

3. Total deviation ET = (EV+ER)/2= -20.0%;

Target field current = 1.2+1.0*ET= 1.0A.

5.2.5 REACTIVE POWER REGULATION MODE (VAR)

This mode can be active via parameter configuration or VAR mode input.

It is applied to occasion that generator outputs fixed reactive power when generator and mains or large-capacity busbar are in parallel.

Under this mode, current transformer needs to be enabled to directly control generator to output reactive power for the load.

There are 4 regulation methods:

1. Set reactive power (fixed value);

2. Adjust output reactive power via digital UP input or DOWN input;
3. Adjust output reactive power via changing analog input voltage (-10-10)V;
4. Adjust output reactive power via changing analog resistance (0-6000)Ω;

The auxiliary regulation output reactive power is the average value of the regulation deviation sum of the above regulation modes. If there are two ways to regulate, the regulation deviation value is equal to the sum of two regulation deviations divided by 2.

For example:

1. When voltage is fine-tuned to 4.0V:

Voltage fine-tuning deviation EV = -20%+ (20% - -20%)*4.0/(5.0-0) = 12.0%;

2. When resistance is fine-tuned to 3000Ω:

Resistance fine-tuning deviation ER = -20%+ (20% - -20%)*3000/(6000-1000)= 4.0%;

3. Total deviation ET = (EV+ER)/2= 8.0%;

Target reactive power = 210*(100%+ET)= 226.8kvar.

5.2.6 POWER FACTOR REGULATION MODE (PF)

This mode can be active via parameter configuration or PF mode input port.

It is applied to occasion that generator stabilizes to set power factor when generator and mains or large-capacity busbar are in parallel.

Under this mode, current transformer needs to be enabled to directly control generator power factor.

There are 4 regulation methods:

1. Set power factor (fixed value);
2. Adjust power factor via digital UP input or DOWN input;
3. Adjust power factor via changing analog input voltage (-10-10)V;
4. Adjust power factor via changing analog resistance (0-6000)Ω;

When digital regulation is chosen, output power factor is the sum of set value and digital regulation deviation.

When analog resistance or voltage regulation is chosen, output power factor is the average value of the sum of regulation modes's regulation value. If there are two ways to regulate, the regulation deviation value is equal to the sum of two regulation deviations divided by 2.

For example:

1. When voltage is fine-tuned to 4.0V:

Voltage fine-tuning deviation TV = 0.50L+ (1.00 - 0.50L)*4.0/(10.0-0) = 0.70L;

2. When resistance is fine-tuned to 1000Ω:

Resistance fine-tuning deviation TR = 0.50L+ (1.00 - 0.50L)*1000/(6000-1000)= 0.60L;

3. Target power factor T = (TV+TR)/2 = 0.65L.

6 PROTECTION AND LIMIT

6.1 WARNING ALARMS

When the regulator detects the warning signal, it only sends warning and not stop the excitation output.

Table 7 Warning Alarms

No.	Warning	Description
1	Gen Over Voltage	When gen over voltage alarm detection is enabled and regulator detects that gen terminal voltage is higher than threshold, it will send warning alarm signal. It is always detected.
2	Gen Under Voltage	When gen under voltage alarm detection is enabled and regulator detects that gen terminal voltage is lower than threshold, it will send warning alarm signal. It is detected after gen frequency is higher than knee frequency firstly.
3	Gen Over Frequency	When gen over frequency alarm detection is enabled and regulator detects that gen frequency is higher than threshold, it will send warning alarm signal. It is always detected.
4	Gen Under Frequency	When gen under frequency alarm detection is enabled and regulator detects that gen frequency is lower than threshold, it will send warning alarm signal. It is detected after gen frequency is higher than knee frequency firstly.
5	No Power Generation	When no power generation alarm detection is enabled and regulator detects that gen voltage and frequency are both 0, it will send warning alarm signal. It is detected after gen frequency is higher than knee frequency firstly or field current is higher that threshold.
6	Excitation Over Current	When over-excitation limit is enabled and regulator detects that field current is higher than threshold 1 or over-excitation limit is active and action is warning, it will send warning alarm signal. It is always detected.
7	Excitation Over Voltage	When excitation over voltage detection is enabled and regulator detects that excitation voltage is higher than threshold, it will send warning alarm signal. It is always detected.
8	Large THDu	When voltage waveform distortion detection is enabled and regulator detects that gen THDu is higher than threshold, it will send warning alarm signal. It is always detected.
9	Unbalanced Voltage	When unbalanced voltage detection is enabled and regulator detects that unbalanced voltage is higher than threshold, it will send warning alarm signal.

SmartGen

No.	Warning	Description
		It is always detected.
10	Gen Loss of Phase	When gen loss of phase detection is enabled and regulator detects that gen phase is lost, it will send warning alarm signal. It is detected when gen voltage is higher than 50V.
11	Gen Reverse Phase Sequence	When gen reverse phase sequence detection is enabled and regulator detects that gen phase sequence is reverse, it will send warning alarm signal. It is detected when gen voltage is higher than 50V.
12	Low Power Factor	When low power factor detection is enabled and regulator detects that gen power factor is lower than threshold, it will send warning alarm signal. It is always detected.
13	Stator Over Current	When stator current limit is enabled and regulator detects that stator current is higher than over current alarm 1 threshold or stator current limit is active and action is warning, it will send warning alarm signal. It is always detected.
14	Over Power	When over power alarm detection is enabled and regulator detects that gen power is higher than threshold, it will send warning alarm signal. It is always detected.
15	Reverse Power	When reverse power alarm detection is enabled and regulator detects that gen reverse power (power is negative) is higher than threshold, it will send warning alarm signal. It is always detected.
16	Loss of Excitation	When loss of excitation alarm detection is enabled and regulator detects that gen reactive power (power is negative) is higher than threshold, it will send warning alarm signal. It is always detected.
17	Large THDi	When current waveform distortion detection is enabled and regulator detects that stator THDi is higher than threshold, it will send warning alarm signal. It is always detected.
18	Short Circuit	When short circuit detection is enabled and regulator detects that stator current is higher than threshold, it will send warning alarm signal. It is always detected.
19	Rotating Diode Open	When rotating diode open circuit detection is enabled and regulator detects that field current harmonic is higher than threshold (default 5%), it will send warning alarm signal. It is always detected.
20	Rotating Diode Short	When rotating diode short circuit detection is enabled and regulator detects that field current harmonic is higher than threshold (default 10%), it will send warning alarm signal. It is always detected.

NOTE: When poles ratio (exciter poles/generator poles) is not equal to 0, field current harmonic is the sum of two

harmonic values whose pole ratio is close to each other; when it is equal to 0, field current harmonic is the sum of each harmonic value. For example, the pole ratio of exciter with 14 poles and generator with 4 poles is 2.33, which is the percentage sum of harmonic 2 and 3.

6.2 FAULT ALARMS

When the regulator detects the fault alarm signal, it will send signal to stop excitation output and display alarm types.

Table 8 Fault Alarms

No.	Fault	Description
1	Gen Over Voltage	When gen over voltage alarm detection is enabled and regulator detects that gen terminal voltage is higher than threshold, it will send fault alarm signal. It is always detected.
2	Gen Under Voltage	When gen under voltage alarm detection is enabled and regulator detects that gen terminal voltage is lower than threshold, it will send fault alarm signal. It is detected after gen frequency is higher than knee frequency firstly.
3	Gen Over Frequency	When gen over frequency alarm detection is enabled and regulator detects that gen frequency is higher than threshold, it will send fault alarm signal. It is always detected.
4	Gen Under Frequency	When gen under frequency alarm detection is enabled and regulator detects that gen frequency is lower than threshold, it will send fault alarm signal. It is detected after gen frequency is higher than knee frequency firstly.
5	No Power Generation	When no power generation alarm detection is enabled and regulator detects that gen voltage and frequency are both 0, it will send fault alarm signal. It is detected after gen frequency is higher than knee frequency firstly or field current is higher that threshold.
6	Excitation Over Current	When over-excitation limit is enabled, over-excitation limit is active and action is shutdown, it will send fault alarm signal. It is always detected.
7	Excitation Over Voltage	When excitation over voltage detection is enabled and regulator detects that excitation voltage is higher than threshold, it will send fault alarm signal. It is always detected.
8	Unbalanced Voltage	When unbalanced voltage detection is enabled and regulator detects that unbalanced voltage is higher than threshold, it will send fault alarm signal. It is always detected.
9	Large THDu	When voltage waveform distortion detection is enabled and regulator detects that THDu is higher than threshold, it will send fault alarm signal. It is always detected.

No.	Fault	Description
10	Over Power	When over power detection is enabled and regulator detects that load power (power is positive) is higher than threshold, it will send fault alarm signal. It is always detected.
11	Reverse Power	When reverse power alarm detection is enabled and regulator detects that load reverse power (power is negative) is higher than threshold, it will send fault alarm signal. It is always detected.
12	Low Power Factor	When low power factor detection is enabled and regulator detects that gen power factor is lower than threshold, it will send fault alarm signal. It is always detected.
13	Stator Over Current	When stator current limit is enabled and regulator detects that stator current is higher than over current alarm 1 threshold or stator current limit is active and action is warning, it will send fault alarm signal. It is always detected.
14	Large THDi	When current waveform distortion detection is enabled and regulator detects that THDi is higher than threshold, it will send fault alarm signal. It is always detected.
15	Short Circuit	When short circuit detection is enabled and regulator detects that load current is higher than threshold, it will send fault alarm signal. It is always detected.
16	Loss of Excitation	When loss of excitation alarm detection is enabled and regulator detects that gen reactive power (power is negative) is higher than threshold, it will send fault alarm signal. It is always detected.
17	Rotating Diode Open	When rotating diode open circuit detection is enabled and regulator detects that field current harmonic is higher than threshold, it will send fault alarm signal. It is always detected.
18	Rotating Diode Short	When rotating diode short circuit detection is enabled and regulator detects that field current harmonic is higher than threshold, it will send fault alarm signal. It is always detected.

smartgen

6.3 UNDER EXCITATION LIMIT

Generator will be out of step due to excessive reduction of field current, which will cause the generator end overheating. Under excitation limit can be realized via enabling it. The under excitation limit curve can be set to 5 points, and the percentage of active power and reactive power can be set according to generator power characteristic curve, as shown in the following diagram.

Under excitation limit is active in VAR and PF regulation modes. When the limit is active, voltage regulator will limit the field current to make generator run in the limits of power characteristic curve and thermal stability limit line.

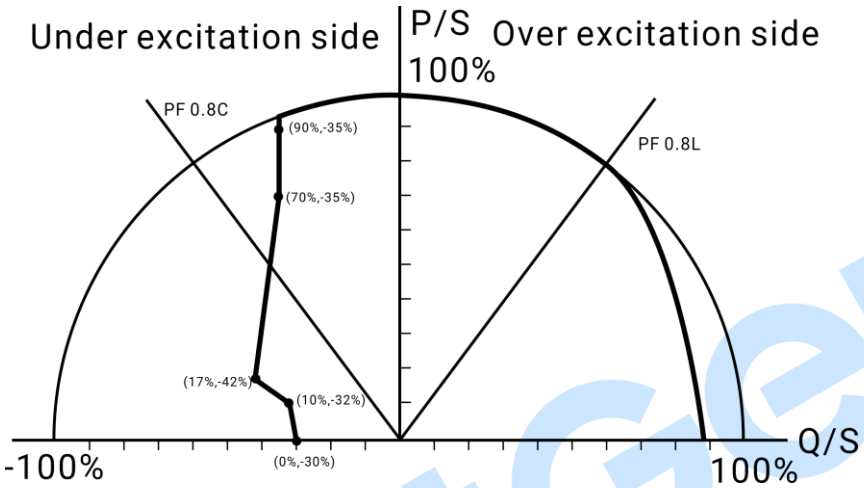

Fig.19 Under Excitation Limit Curve

6.4 OVER EXCITATION LIMIT

It will cause excitation winding overheating when generator runs in the over excitation range of power characteristic curve. Therefore, generator needs to recover system voltage to provide more reactive power to it, that is, forced excitation capability. There are 2 excitation overcurrent threshold can be set for over excitation limit, overcurrent 2 threshold is forced excitation limit value, overcurrent 1 threshold is long-time allowing field current. The regulator can limit forced field current instantly. When forced excitation limit is active, field current will be limited less than 0.95 times the excitation overcurrent 2 threshold; when field current exceeds overcurrent 1 threshold and reaches over-excitation inverse time, over-excitation limit of field current will be active and then field current will be limited less than 0.95 times the excitation overcurrent 1 threshold, waiting for accumulated heat to release.

Action can be set when over-excitation limit is active, regulator will issue warning or fault alarm after delaying set over-excitation limit time.

Calculation method of over-excitation inverse time:

Determine inverse time limit curve via excitation overcurrent 1 threshold, overcurrent 2 threshold.

The calculation formula is: $$t=\frac{I_{FEL}^{2}-I_{OEL}^{2}}{I_{E}^{2}-I_{OEL}^{2}}Tq$$.

Definition: I_{FEL} (forced excitation limit value) --- excitation overcurrent 2 threshold

T_q (forced excitation allowing time) --- overcurrent delay

I_{OEL}(over-excitation limit value) --- excitation overcurrent 1 threshold

I_E --- actual field current t --- calculation value of inverse time

Over-excitation limiting method:

Over-excitation limiting is carried out by comparing the calculated heat accumulation $B=\int (I_E^2-I_{OEL}^2)dt$ with the maximum allowing heat accumulation $B_0=(I_{FEL}^2-I_{OEL}^2)Tq$. When heat accumulation B≥B0 or accumulation time of over-excitation reaches the maximum delay time, over-excitation limit is active.

Heat accumulation calculation:

1) B=0, $I_E \le I_{OEL}$, over-excitation never occurred, no overheating accumulated;
2) B=0, $I_E > I_{OEL}$, over-excitation never occurred, current over-excitation, heat accumulation: $B = B+(I_E^2-I_{OEL}^2)\Delta t$;
3) B>0, $I_E > I_{OEL}$, over-excitation never occurred, current over-excitation, heat accumulation: $B = B+(I_E^2-I_{OEL}^2)\Delta t$;
4) B>0, $I_E < I_{OEL}$, over-excitation has occurred, there is no over-excitation at present, and the heat is accumulated in the reverse direction: $B = B+(I_E^2-I_{OEL}^2)\Delta t$, that is, the heat release process. When B≤0, the calculation is cut off, B=0.

When over-excitation limit is active, field current will be limited less than 0.95 times the excitation overcurrent 1 threshold, heat will be released until it is over (B=0), and forced excitation again is not allowed during this process.

For example:

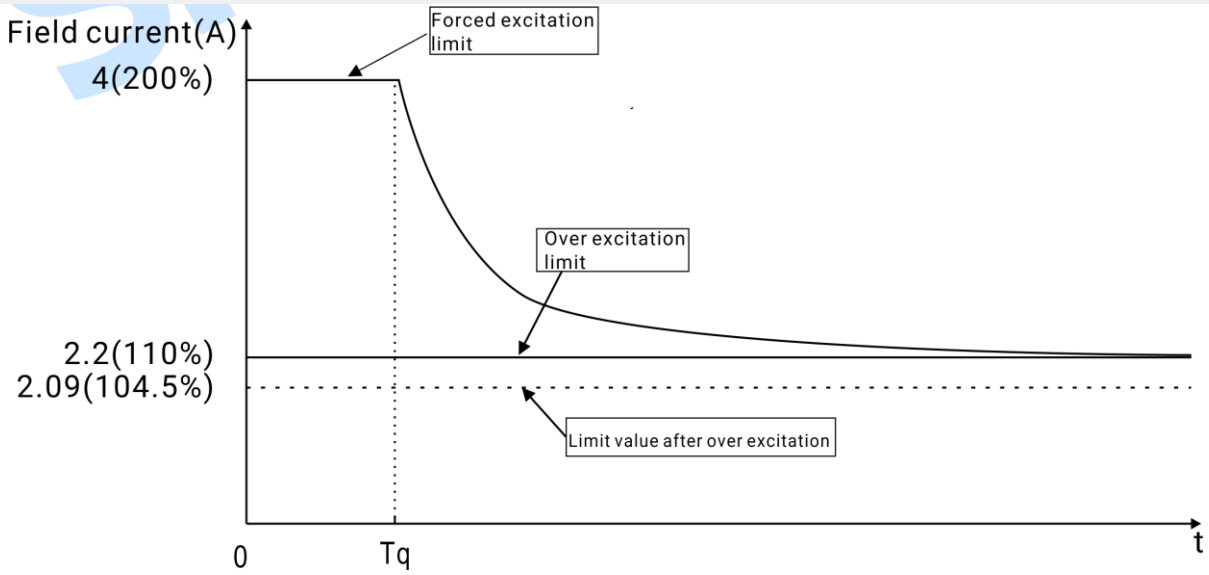

Fig.20 Over-excitation Limit Setting

6.5 STATOR CURRENT LIMIT

When stator current exceeds the overcurrent 1 threshold in generator running, the stator current inverse time is calculated. When stator current reaches inverse time limit, it will be limited to 0.95 times overcurrent 1 threshold. When stator current limit is active, overcurrent again is allowed after waiting for the internal heat release of the stator. The stator current limiting curve is determined by two points.

Stator current limit is active in AVR mode.

Action can be set when stator current limit is active, regulator will issue warning or fault alarm after delaying set limit action time.

The calculation method of stator current inverse time is same as over-excitation limit inverse time.

The calculation formula is: $t_g = \frac{I_{eq}^2 - I_{gL}^2}{I_L^2 - I_{gL}^2} T_{eq}$.

Definition: I_{eq} (equivalent stator current) --- overcurrent 2 threshold

T_{eq} (allowing delay under equivalent stator current) --- overcurrent alarm delay

I_{gL} (max long time allowing stator current) --- overcurrent 1 threshold

I_L --- actual stator current t_g --- calculation value of inverse time

Stator current limiting method:

Stator current limiting is carried out by comparing comparing the calculated heat accumulation $B=\int (I_L^2-I_{gL}^2)dt$ with the maximum allowed heat accumulation $B_0=(I_{eq}^2-I_{gL}^2)T_{eq}$. When heat accumulation B≥B0 or accumulation time of overcurrent reaches the maximum delay time, stator current limit is active.

Heat accumulation calculation:

1) B=0, $I_L \le I_{gL}$, overcurrent never occurred, no overheating accumulated;
2) B=0, $I_L > I_{gL}$, overcurrent never occurred, current overcurrent, heat accumulation: $B = B+(I_L^2-I_{gL}^2)\triangle t$;
3) B>0, $I_L > I_{gL}$, over-excitation has occurred, current over-excitation, heat accumulation: $B = B+(I_L^2-I_{gL}^2)\triangle t$;
4) B>0, $I_L < I_{gL}$, over-excitation has occurred, there is no over-excitation at present, and the heat is accumulated in the reverse direction: $B = B+(I_L^2-I_{gL}^2)\triangle t$, that is, the heat release process. When B≤0, the calculation is cut off, B=0.

When stator current limit is active, stator current will be limited less than 0.95 times the overcurrent 1 threshold, heat will be released until it is over (B=0), and overcurrent again is not allowed during this process.

For example:

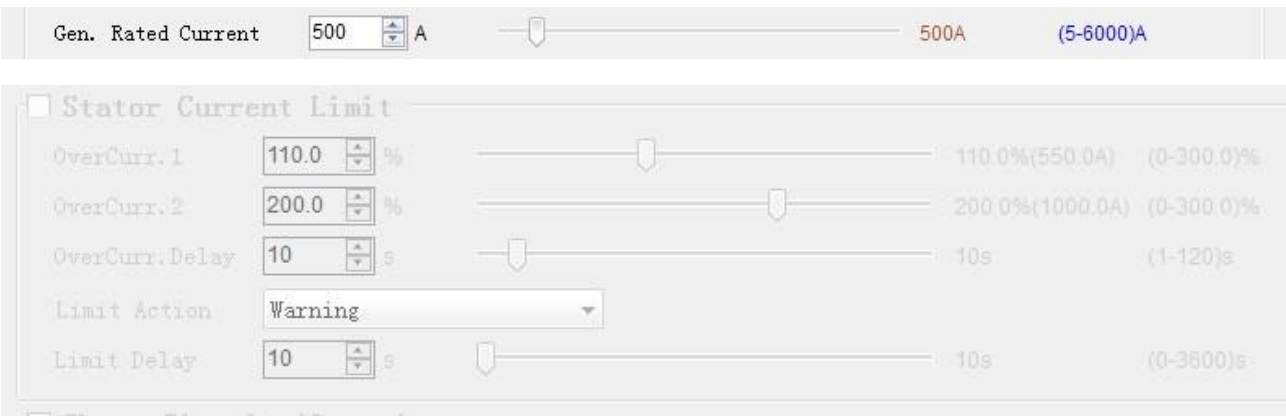

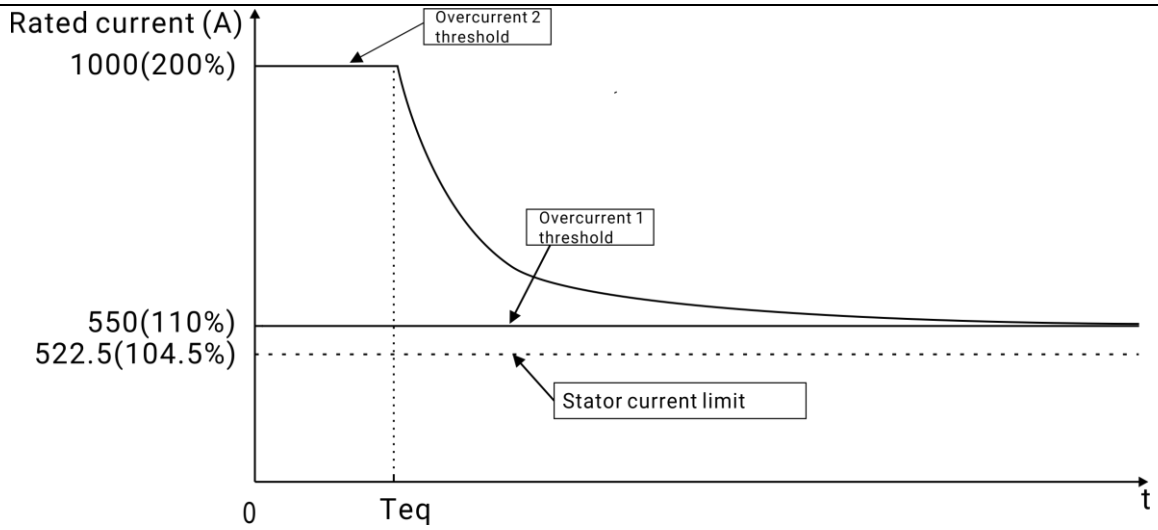

Fig.21 Stator Current Limit Setting

SmartGen

7 PARAMETER RANGE AND DEFINITION

7.1 PARAMETER SETTING CONTENT AND RANGE

Table 9 Parameter Setting Content and Range

No.	Item		Range	Default	Description
Module Setting					
1	Password Setting		(0-65535)	00318	
2	Alarm Data Record Interval		(0-60.0) s	0.1	
System Setting					
1	AC Input		(0-2)	0	0: 3P3W (U-V-W) 1: 2-phase (V-W) 2: 2-phase (U-W)
2	PT	Enable	(0-1)	0	0: Disable; 1: Enable
		Primary Voltage	(30-30000) V	100	PT's primary voltage.
		Secondary Voltage	(30-30000)V	100	PT's secondary voltage.
3	CT	Enable	(0-1)	0	0: Disable; 1: Enable
		Primary Current	(5-6000) A	500	CT's primary current
		Secondary Current	(0-1)	0	0: 5A 1: 1A
		CT Wiring	(1-2)	1	1: IA 2: IB
4	Exciter Poles		(0-64)	0	Pole ratio=exciter poles/generator poles, which is used for detecting rotating diode fault.
5	Generator Poles		(1-64)	4	
6	Gen Rated Voltage		(30-30000) V	400	Standard for gen over/under voltage, target voltage. If PT is fitted, this value is the secondary voltage.
7	Gen Rated Current		(5-6000) A	500	Generator's rated current, standard for stator current.
8	Gen Rated Power Factor		(0.00-1.00)	0.8	Generator's rated power factor, standard for load power factor.
9	Gen Rated Frequency		(10.0-200.0) Hz	50.0	Standard for gen over/under frequency, voltage/frequency.
10	Gen Rated Active Power		(0-6000) kW	276	Generator's rated active power, standard for load active power.
11	Gen Rated Reactive Power		(0-6000) kvar	208	Generator's rated reactive power, standard for load reactive power.
12	Gen Rated Apparent Power		(0-6000) kVA	346	Generator's rated apparent power, standard for load apparent power.

No.	Item		Range	Default	Description
Excitation Setting					
1	Rated Voltage		(0-200) V	63	Rated excitation voltage, standard for excitation over/under voltage.
2	Over Voltage 1 Setting	Enable	(0-1)	1	0: Disable; 1: Enable. Set value is the percentage of rated excitation voltage. Return value is the percentage of rated excitation voltage Delay value. Action: 0: None; 1: Warning; 2: Fault.
		Threshold	(0-200.0) %	120	
		Return Value	(0-200.0) %	116	
		Delay Value	(0-3600) s	3	
		Act	(0-2)	2	
3	Over Voltage 2 Setting	Enable	(0-1)	1	
		Threshold	(0-200.0) %	110	
		Return Value	(0-200.0) %	108	
		Delay Value	(0-3600) s	5	
		Act	(0-2)	1	
4	Rated Current		(0-10) A	5.0	Rated field current, standard for over-excitation limit.
5	Over Excitation Limit (OEL)	Enable	(0-1)	0	0: Disable; 1: Enable
		Overcurrent 1	(0-300.0) %	110	The threshold is the percentage of rated field current.
		Overcurrent 2	(0-300.0) %	200	
		Delay	(1-120) s	10	Delay value.
		Over-excitation Act	(0-2)	1	Action: 0: None; 1: Warning; 2: Fault.
		Over-excitation Delay	(0-3600) s	10	Delay value.
6	Under Excitation Limit (UEL)	Enable	(0-1)	0	0: Disable; 1: Enable
		Active Power (%)	(0-100.0) %	0	Under-excitation limit 1.
		Reactive Power (%)	(-100.0-0) %	-30	
		Active Power (%)	(0-100.0) %	10	Under-excitation limit 2.
		Reactive Power (%)	(-100.0-0) %	-32	
		Active Power (%)	(0-100.0) %	17	Under-excitation limit 3.
		Reactive Power (%)	(-100.0-0) %	-42	
		Active Power (%)	(0-100.0) %	70	Under-excitation limit 4.
		Reactive Power (%)	(-100.0-0) %	-35	
		Active Power (%)	(0-100.0) %	90	Under-excitation limit 5.
		Reactive	(-100.0-0) %	-35	

No.	Item		Range	Default	Description
		Power (%)			
7	Short Circuit Setting of Rotating Diode		(0-1)	0	0: Disable; 1: Enable. Set value is the percentage of field current harmonic. Return value is the percentage of field current harmonic. Delay value. Action: 0: None; 1: Warning; 2: Fault.
			(0-100.0) %	10	
			(0-100.0) %	9	
			(0-3600) s	1	
			(0-2)	2	
8	Open Circuit Setting of Rotating Diode		(0-1)	0	
			(0-100.0) %	5	
			(0-100.0) %	4	
			(0-3600) s	5	
			(0-2)	2	
Gen Setting					
1	Reverse Phase Seq. Detect		(0-1)	0	0: Disable; 1: Enable
2	Loss of Phase Detect		(0-1)	0	0: Disable; 1: Enable
3	Gen Over Voltage Alarm 1	Enable	(0-1)	1	0: Disable; 1: Enable. Set value is the percentage of gen rated voltage. Return value is the percentage of gen rated voltage. Delay value. Action: 0: None; 1: Warning; 2: Fault.
		Threshold	(0-200.0) %	120	
		Return Value	(0-200.0) %	118	
		Delay Value	(0-3600) s	3	
		Act	(0-2)	2	
4	Gen Over Voltage Alarm 2	Enable	(0-1)	1	
		Threshold	(0-200.0)%	110	
		Return Value	(0-200.0)%	108	
		Delay Value	(0-3600)s	5	
		Act	(0-2)	1	
5	Gen Under Voltage Alarm 1	Enable	(0-1)	1	
		Threshold	(0-200.0)%	80	
		Return Value	(0-200.0)%	82	
		Delay Value	(0-3600)s	3	
		Act	(0-2)	2	
6	Gen Under Voltage Alarm 2	Enable	(0-1)	1	
		Threshold	(0-200.0)%	84	
		Return Value	(0-200.0)%	86	
		Delay Value	(0-3600)s	5	
		Act	(0-2)	1	
7	Gen Over Frequency Alarm 1	Enable	(0-1)	1	0: Disable; 1: Enable Set value is the percentage of gen rated frequency. Return value is the percentage of gen rated frequency. Delay value. Action: 0: None; 1: Warning; 2:
		Threshold	(0-200.0)%	114	
		Return Value	(0-200.0)%	110	
		Delay Value	(0-3600)s	3	
		Act	(0-2)	2	
8	Gen Over Frequency	Enable	(0-1)	1	
		Threshold	(0-200.0)%	110	

SmartGen

No.	Item		Range	Default	Description
	Alarm 2	Return Value	(0-200.0)%	108	Fault.
		Delay Value	(0-3600)s	5	
		Act	(0-2)	1	
9	Gen Under Frequency Alarm 1	Enable	(0-1)	1	
		Threshold	(0-200.0)%	80	
		Return Value	(0-200.0)%	82	
		Delay Value	(0-3600)s	3	
		Act	(0-2)	2	
10	Gen Under Frequency Alarm 2	Enable	(0-1)	1	
		Threshold	(0-200.0)%	84	
		Return Value	(0-200.0)%	86	
		Delay Value	(0-3600)s	5	
		Act	(0-2)	1	
11	Gen Unbalanced Voltage 1	Enable	(0-1)	1	0: Disable; 1: Enable Set value is gen unbalanced voltage. Return value is gen unbalanced voltage. Delay value. Action: 0: None; 1: Warning; 2: Fault.
		Threshold	(0-200.0)%	10	
		Return Value	(0-200.0)%	5	
		Delay Value	(0-3600)s	5	
		Act	(0-2)	1	
12	Gen Unbalanced Voltage 2	Enable	(0-1)	0	
		Threshold	(0-200.0)%	10	
		Return Value	(0-200.0)%	5	
		Delay Value	(0-3600)s	5	
		Act	(0-2)	0	
13	Gen Waveform Distortion 1	Enable	(0-1)	0	0: Disable; 1: Enable Set value is waveform distortion of gen voltage. Return value is waveform distortion of gen voltage. Delay value. Action: 0: None; 1: Warning; 2: Fault.
		Threshold	(0-200.0)%	10	
		Return Value	(0-200.0)%	5	
		Delay Value	(0-3600)s	5	
		Act	(0-2)	0	
14	Gen Waveform Distortion 2	Enable	(0-1)	0	
		Threshold	(0-200.0)%	10	
		Return Value	(0-200.0)%	5	
		Delay Value	(0-3600)s	5	
		Act	(0-2)	0	
15	No Power Generation Alarm	Enable	(0-1)	1	0: Disable; 1: Enable
		Threshold	(0-100.0)%	30	Set value is the percentage of rated field current.
		Return Value	(0-100.0)%	10	
		Delay Value	(0-3600)s	2	Delay value.
		Act	(0-2)	2	Action: 0: None; 1: Warning; 2: Fault.
16	Stator Current	Enable	(0-1)	0	0: Disable; 1: Enable
		Overcurrent	(0-300.0) %	110	Threshold is the percentage of gen

No.	Item		Range	Default	Description
	Limit (SCL)	Alarm 1			rated current.
		Overcurrent Alarm 2	(0-300.0) %	200	
		Overcurrent Alarm Delay	(1-120) s	10	Delay value.
		Limit Action	(0-2)	1	Action: 0: None; 1: Warning; 2: Fault.
		Action Delay	(0-3600) s	10	Delay value.
17	Short Circuit Alarm 1	Enable	(0-1)	1	0: Disable; 1: Enable. Set value is the percentage of gen rated current. Return value is the percentage of gen rated current. Delay value. Action: 0: None; 1: Warning; 2: Fault.
		Threshold	(0-500.0)%	200	
		Return Value	(0-500.0)%	180	
		Delay Value	(0-3600)s	1	
		Act	(0-2)	2	
18	Short Circuit Alarm 2	Enable	(0-1)	0	
		Threshold	(0-500.0)%	200	
		Return Value	(0-500.0)%	180	
		Delay Value	(0-3600)s	5	
		Act	(0-2)	1	
19	Current Waveform Distortion 1	Enable	(0-1)	0	0: Disable; 1: Enable. Set value is the waveform distortion of load current. Return value is the waveform distortion of load current. Delay value. Action: 0: None; 1: Warning; 2: Fault。
		Threshold	(0-200.0)%	10	
		Return Value	(0-200.0)%	5	
		Delay Value	(0-3600)s	5	
		Act	(0-2)	0	
20	Current Waveform Distortion 2	Enable	(0-1)	0	
		Threshold	(0-200.0)%	10	
		Return Value	(0-200.0)%	5	
		Delay Value	(0-3600)s	5	
		Act	(0-2)	0	
21	Over Power Alarm 1	Enable	(0-1)	1	0: Disable; 1: Enable. Set value is the percentage of gen rated active power. Return value is the percentage of gen rated active power. Delay value. Action: 0: None; 1: Warning; 2: Fault.
		Threshold	(0-200.0)%	120	
		Return Value	(0-200.0)%	118	
		Delay Value	(0-3600)s	3	
		Act	(0-2)	2	
22	Over Power Alarm 2	Enable	(0-1)	0	
		Threshold	(0-200.0)%	110	
		Return Value	(0-200.0)%	108	
		Delay Value	(0-3600)s	5	
		Act	(0-2)	1	
23	Reverse Power Alarm 1	Enable	(0-1)	1	

SmartGen

No.	Item		Range	Default	Description
		Threshold	(0-200.0)%	10	
		Return Value	(0-200.0)%	8	
		Delay Value	(0-3600)s	3	
		Act	(0-2)	2	
24	Reverse Power Alarm 2	Enable	(0-1)	0	
		Threshold	(0-200.0)%	5	
		Return Value	(0-200.0)%	3	
		Delay Value	(0-3600)s	5	
		Act	(0-2)	1	
25	Loss of Excitation Fault 1	Enable	(0-1)	1	0: Disable; 1: Enable. Set value is the percentage of gen rated reactive power. Return value is the percentage of gen rated reactive power. Delay value. Action: 0: None; 1: Warning; 2: Fault.
		Threshold	(0-200.0)%	20	
		Return Value	(0-200.0)%	18	
		Delay Value	(0-3600)s	5	
		Act	(0-2)	1	
26	Loss of Excitation Fault 2	Enable	(0-1)	0	
		Threshold	(0-200.0)%	20	
		Return Value	(0-200.0)%	18	
		Delay Value	(0-3600)s	5	
		Act	(0-2)	1	
27	Power Factor Low Alarm 1	Enable	(0-1)	1	0: Disable; 1: Enable. Set value is gen power factor. Return value is gen power factor. Delay value. Action: 0: None; 1: Warning; 2: Fault.
		Threshold	(0-1.00)	0.70	
		Return Value	(0-1.00)	0.75	
		Delay Value	(0-3600)s	5	
		Act	(0-2)	2	
28	Power Factor Low Alarm 2	Enable	(0-1)	0	
		Threshold	(0-1.00)	0.70	
		Return Value	(0-1.00)	0.75	
		Delay Value	(0-3600)s	5	
		Act	(0-2)	1	
Excitation Mode					
1	Regulation Mode		(0-3)	0	0: AVR Mode; 1: FCR Mode; 2: VAR Mode; 2: PF Mode.
2	Start Threshold		(0.1-100.0) %	20.0	Set value of AVR mode is the percentage of rated voltage. Set value of FCR mode is the percentage of rated field current.
3	Initial Duty Cycle		(0.0-100.0) %	0	Initial PWM duty cycle.
4	Soft Start Enable		(0-1)	0	0: Disable; 1: Enable.
5	Soft Start Time		(0.1-120) s	3	When this function is enabled, it is the transfer time of generator terminal voltage from soft start

smartgen

No.	Item		Range	Default	Description
					voltage to rated voltage.
6	Excitation Stop	Frequency	(10.0-100.0) Hz	10.0	Frequency of excitation stopping.
		Supply Volt	(0-450.0) V	20.0	Power input voltage of excitation stopping.
		Delay	(0-3600) s	0	Delay value when the above two stop excitation conditions are met at the same time.
7	Threshold Start Mode		(0-1)	0	0: Disable; 1: Enable.
AVR Setting					
1	AVR Output Voltage		(0.0-200.0) %	100.0	AVR mode, outputting voltage value, percentage of rated voltage.
2	Volt/Freq. (U/F) Set	Start Freq.	(10.0-100.0) %	10	Gen frequency when U/F characteristic starts.
		Knee Freq.	(70.0-100.0) %	96	Knee frequency of U/F characteristic.
		U/F Slope	(0.5-5.0) %/Hz	1.0	Slope of U/F characteristic, change the rated frequency by 1%, change the rated voltage by SLOPE%
3	Load Compensation (LCF)	Enable	(0-1)	0	0: Disable; 1: Enable.
		Drop Value	(70.0-100.0) %	90.0	Set value is the percentage of rated voltage.
		Delay	(0-10.0) s	1.0	Continuous time of load compensation.
		Rise Slope	(0-100.0) %/s	0.2	The percentage of the rated voltage rising per second.
4	Droop Set	Enable	(0-1)	0	Droop and transmission line drop compensation cannot be enabled at the same time.
		Set Value	(0.0-10.0) %	3.0	
5	Transmission Line Drop Set	Enable	(0-1)	0	
		Set Value	(0.0-20.0) %	3.0	
AVR Fine-tuning Setting					
1	Lower Limit		(-50.0-(-0.1)) %	-10	Set value is the percentage of gen rated voltage.
2	Upper Limit		(0.1-50.0) %	10	
3	Digital Fine-tuning	Enable	(0-1)	0	0: Disable; 1: Enable.
		Rate	(0.1-9.9) %/s	1.0	When it is enabled, gen output voltage can be adjusted through input port.
4	Voltage Fine-tuning	Enable	(0-1)	0	0: Disable; 1: Enable.
		Min Voltage	(-10.0-10.0) V	0	When it is enabled, gen output voltage can be adjusted through analog input voltage.
		Max Voltage	(-10.0-10.0) V	5.0	
5	Resistance Fine-tuning	Enable	(0-1)	0	0: Disable; 1: Enable.
		Min Resist.	(0-6000) Ω	0	When it is enabled, gen output

No.	Item		Range	Default	Description
		Max Resist.	(0-6000) Ω	6000	voltage can be adjusted through analog input resistance.
FCR Setting					
1	Field Current Track		(0-1)	0	0: Disable; 1: Enable.
2	FCR Field Current		(0-10.0) A	0.1	FCR mode, outputting field current.
3	Lower Limit		(-100.0-0) %	-100.0	Set value is the percentage of rated field current.
4	Upper Limit		(0.0-200.0) %	100.0	
5	Digital Fine-tuning	Enable	(0-1)	0	0: Disable; 1: Enable.
		Rate	(0.1-9.9) %/s	1.0	When it is enabled, field current can be adjusted through input port.
6	Voltage Fine-tuning	Enable	(0-1)	0	0: Disable; 1: Enable.
		Min Voltage	(-10.0-10.0) V	0	When it is enabled, field current can be adjusted through analog input voltage.
		Max Voltage	(-10.0-10.0) V	5.0	
7	Resistance Fine-tuning	Enable	(0-1)	0	0: Disable; 1: Enable.
		Min Resist.	(0-6000) Ω	0	When it is enabled, field current can be adjusted through analog input resistance.
		Max Resist.	(0-6000) Ω	6000	
VAR Setting					
1	VAR Control		(-100.0-100.0) %	0	VAR mode, outputting the percentage of reactive power.
2	Lower Limit		(-100.0-0) %	-100	Set value is the percentage of rated reactive power.
3	Upper Limit		(0.0-100.0) %	100	
4	Digital Fine-tuning	Enable	(0-1)	0	When it is enabled, reactive power can be adjusted through input port.
		Rate	(0.1-9.9) %/s	1.0	
5	Voltage Fine-tuning	Enable	(0-1)	0	0: Disable; 1: Enable.
		Min Voltage	(-10.0-10.0) V	0	When it is enabled, reactive power can be adjusted through analog input voltage.
		Max Voltage	(-10.0-10.0) V	5.0	
6	Resistance Fine-tuning	Enable	(0-1)	0	0: Disable; 1: Enable.
		Min Resist.	(0-6000) Ω	0	When it is enabled, reactive power can be adjusted through analog input resistance.
		Max Resist.	(0-6000) Ω	6000	
PF Setting					
1	PF Control		(0.50L-0.50C)	0.800L	PF mode, target power factor.
2	Lower Limit		(0.50L-0.50C)	1.00	Set value is the maximum and minimum value of power factor.
3	Upper Limit		(0.50L-0.50C)	1.00	
4	Digital Fine-tuning	Enable	(0-1)	0	When it is enabled, power factor can be adjusted through input port.
		Rate	(0.01-0.99) %/s	0.01	
5	Voltage Fine-tuning	Enable	(0-1)	0	0: Disable; 1: Enable.
		Min Voltage	(-10.0-10.0) V	0	When it is enabled, power factor can be adjusted through analog
		Max Voltage	(-10.0-10.0) V	5.0	

No.	Item		Range	Default	Description
					input voltage.
6	Resistance Fine-tuning	Enable	(0-1)	0	0: Disable; 1: Enable.
		Min Resist.	(0-6000) Ω	0	When it is enabled, power factor can be adjusted through analog input resistance.
		Max Resist.	(0-6000) Ω	6000	
PID Setting					
1	DC Compensation		(0-1)	0	0: Disable; 1: Enable.
2	Input Voltage of Excitation Power		(0-450.0) V	270	Input voltage of excitation power in voltage regulator normal running.
3	DC Compensation Factor		(1-10)	3	Compensation factor in DC compensating.
4	Max Output Duty Cycle		(0-100.0) %	100.0	Max output duty cycle in excitation regulation.
5	Negative Excitation		(0-1)	0	0: Disable; 1: Enable.
PID Parameter					
1	AVR	KG Coefficient	(0-20.000) %	1.000	Coefficient of PID set value.
		KP Gain	(0-2000.0) %	20	PID set value of AVR mode.
		KI Stability	(0-2000.0) %	20	
		KD Derivative	(0-2000.0) %	0	
		KE Derivative Filter Coefficient	(0-20.000) %	1.000	Derivative filter coefficient.
2	FCR	KG Coefficient	(0-20.000) %	1.000	Coefficient of PID set value.
		KP Gain	(0-2000.0) %	20	PID set value of FCR mode.
		KI Stability	(0-2000.0) %	20	
		KD Derivative	(0-2000.0) %	0	
		KE Derivative Filter Coefficient	(0-20.000) %	1.000	Derivative filter coefficient.
3	VAR	KG Coefficient	(0-20.000) %	1.000	Coefficient of PID set value.
		KP Gain	(0-2000.0) %	20	PID set value of VAR mode.
		KI Stability	(0-2000.0) %	20	
		KD Derivative	(0-2000.0) %	0	
		KE Derivative Filter Coefficient	(0-20.000)%	1.000	Derivative filter coefficient.
4	PF	KG Coefficient	(0-20.000) %	1.000	Coefficient of PID set value.
		KP Gain	(0-2000.0) %	20	PID set value of PF mode.
		KI Stability	(0-2000.0) %	20	
		KD Derivative	(0-2000.0) %	0	
		KE Derivative Filter Coefficient	(0-20.000) %	1.000	Derivative filter coefficient.
Digital Inputs Setting					
Digital Input1 Setting					
1	Setting		(0-20)	0	Not used.

No.	Item	Range	Default	Description
				Function details see Table 11.
2	Active Type	(0-1)	0	0: Close; 1: Open.
3	Input Delay	(0-20.0) s	2.0	Time from input is active to be confirmed.
Digital Input2 Setting				
1	Setting	(0-20)	0	Not used. Function details see Table 11.
2	Active Type	(0-1)	0	0: Close; 1: Open.
3	Input Delay	(0-20.0) s	2.0	Time from input is active to be confirmed.
Digital Outputs Setting				
Digital Output1 Setting				
1	Content Setting	(0-1)	0	0: Normally Open; 1: Normally Close.
2	Output Type	(0-40)	0	Not used. Function details see Table 10.
Alt. Configuration 1				
1	Enable	(0-1)	0	0: Disable; 1: Enable. Function details see Table 12.
Alt. Configuration 2				
1	Enable	(0-1)	0	0: Disable; 1: Enable. Function details see Table 12.

7.2 DEFINED CONTENTS OF PROGRAMMABLE OUTPUT 1

7.2.1 DEFINED CONTENTS TABLE OF PROGRAMMABLE OUTPUT 1

Table 10 Defined Content of Programmable Output 1

No.	Item	Function Description
0	Not Used	
1	Defined Combination Output 1	See the following contents for function description.
2	Defined Combination Output 2	
3	Reserved	
4	Reserved	
5	Reserved	
6	Reserved	
7	Alarm Output	Action when common warning/fault alarm occurs.
8	Normal Running	Output when voltage regulator is normally running.
9	Gen Over Voltage	Action when gen over voltage alarm occurs.
10	Gen Under Voltage	Action when gen under voltage alarm occurs.
11	Gen Over Frequency	Action when gen over frequency alarm occurs.
12	Gen Under Frequency	Action when gen under frequency alarm occurs.
13	Excitation Overcurrent	Action when excitation overcurrent alarm occurs.

No.	Item	Function Description
14	Excitation Over Voltage	Action when excitation over voltage alarm occurs.
15	Reserved	
16	Gen Unbalanced Voltage	Action when gen unbalanced alarm occurs.
17	No Power Generation	Action when no power generation alarm occurs.
18	Large THDu	Action when large THDu alarm occurs.
19	Rotating Diode Open	Action when rotating diode open circuit alarm occurs.
20	Rotating Diode Short	Action when rotating diode short circuit alarm occurs.
21	Over Power	Action when gen over power alarm occurs.
22	Reverse Power	Action when gen reverse power alarm occurs.
23	Power factor Low	Action when gen power factor low alarm occurs.
24	Stator Overcurrent	Action when stator overcurrent alarm occurs.
25	Loss of Excitation	Action when gen loss of excitation alarm occurs.
26	Reserved	
27	Large THDI	Action when large gen THDi alarm occurs.
28	Short Circuit	Action when short circuit alarm occurs.
29	AVR Mode	Output in AVR mode.
30	FCR Mode	Output in FCR mode.
31	Reserved	
32	VAR Mode	Output in VAR mode.
33	PF Mode	Output in PF mode.
34	Droop Output	Output in Droop mode.
35-40	Reserved	

7.2.2 DEFINED COMBINATION OUTPUT

Defined combination output is composed by 3 parts, **or condition output S1, or condition output S2, and condition output S3**.

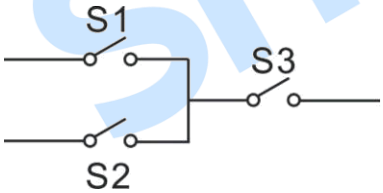

S1 or S2 is **TRUE**, and S3 is **TRUE**, defined combination output is active;

S1 and S2 are **FALSE**, or S3 is **FALSE**, defined combination output is inactive.

NOTE1: S1, S2, S3 can be set as any contents except for "defined combination output" in the output setting.

NOTE2: 3 parts of defined combination output (S1, S2, S3) couldn't include or recursively include themselves.

For example:

Contents of or condition output S1: alarm output;

Close when or condition output S1 is active/inactive: close when active (disconnect when inactive);

Contents of or condition output S2: droop function;

Close when or condition output S2 is active/inactive: close when active (disconnect when inactive);

Contents of and condition output S3: AVR mode;

Close when and condition output S3 is active/inactive: close when active (disconnect when inactive);

When alarm output or droop function is active, if AVR mode is active, defined combination output is active; If AVR mode is inactive, defined combination output is inactive;

When alarm output and droop function are inactive, whatever AVR mode is active or not, defined combination output is inactive.

SmartGen

7.3 DEFINED CONTENTS OF DIGITAL INPUT 1-2

Table 11 Defined Contents of Digital Input 1-2 (All COM Connected Active)

No.	Item	Function Description
0	Not Used	
1	Droop Function	When input is active, droop function is enabled in AVR mode.
2	Excitation Disconnect	After setting, when input is active, voltage regulator enters standby status, excitation is disconnected. When input is inactive, all alarms are removed automatically, voltage regulator enters auto regulation status.
3	AVR Mode	When input is active, voltage regulator enters AVR mode.
4	FCR Mode	When input is active, voltage regulator enters FCR mode.
5	Reserved	
6	PF Mode	When input is active, voltage regulator enters PF mode.
7	VAR Mode	When input is active, voltage regulator enters VAR mode.
8	UP	Different functions for different excitation modes, 10ms for active detection.
9	DOWN	
10	Alarm Reset	When input is active, all alarms are removed automatically.
11	Alt. Configuration 1	When input is active, alt. configuration 1 is active.
12	Alt. Configuration 2	When input is active, alt. configuration 2 is active.
13	Reserved	
14	Reserved	
15	Reserved	
16	Reserved	
17	Reserved	
18	Reserved	
19	Reserved	
20	Reserved	

Table 12 Alt. Configuration Contents

No.	Item	Parameter Range	Default	Description
0	Enable	(0-1)	0	0: Disable; 1: Enable.
1	AC Input Sampling	(0-1)	0	0: 3P3W (U-V-W) 1: 2-phase (V-W) 2: 2-phase (U-W)
2	CT Wiring	(1-2)	1	1：IA 2：IB
3	Gen Rated Voltage	(30-30000)V	230	Gen rated voltage.
4	Gen Rated Frequency	(10.0-100.0)Hz	50.0	
5	Gen Rated Current	(5-6000)A	500	
6	Gen Rated Active Power	(0-6000)kW	276	
7	Gen Rated Reactive Power	(0-6000)kvar	210	

No.	Item	Parameter Range	Default	Description
8	Gen Rated Apparent Power	(0-6000)kVA	346	
9	Rated Power Factor	(0.00-1.00)	0.8	
10	Rated Excitation Current	(0-200)V	63	
11	Rated Field Current	(0-10)A	5.0	

NOTE: When "Alt. Configuration 1" is chosen, if this input is active, alt. configuration is active, that is, related parameters are changed as parameters of "Alt. Configuration 1".

8 PARAMETER SETTING

It needs to input the same password with voltage regulator for parameter setting via PC software or mobile APP.

NOTES:

a) Voltage regulator needs to be powered on (USB or excitation power) for parameter setting via mobile APP.

b) Please modify the internal parameters in standby mode (programmable input and output configuration, multiple delays, etc.) otherwise fault alarm or other abnormal conditions may appear. PID parameters can be directly adjusted in running.

c) Higher threshold must be greater than the lower threshold, such as over voltage threshold must be greater than under voltage threshold; otherwise over voltage and under voltage will occur at the same time.

d) Please set return value correctly for warning alarm, otherwise, alarm will be abnormal; when setting higher warning, return value should be less than set value, when setting lower warning, return value should be greater than set value.

e) Programmable input 1-2 cannot be set as the same items, otherwise it may have fault.

SmartGen

9 REAL-TIME DATA ANALYSIS

Real-time data curve analysis can be conducted via PC software or mobile APP. Eight parameters can be monitored at the same time, each monitoring parameter can set maximum value and minimum value. The parameter curve display can be enabled (disabled) by checking (not checking) the box in front of the parameter. The following diagram shows data analysis interface.

Click “Start” button to monitor the data, click “Pause” button to suspend data monitoring, click “Stop” button to stop data monitoring. Click “Save Data” button to save the curve as CSV or XML file, click “Load Data” to load the saved curve file (CSV file is supported only).

Sampling interval of real-time data is fixed as 10ms.

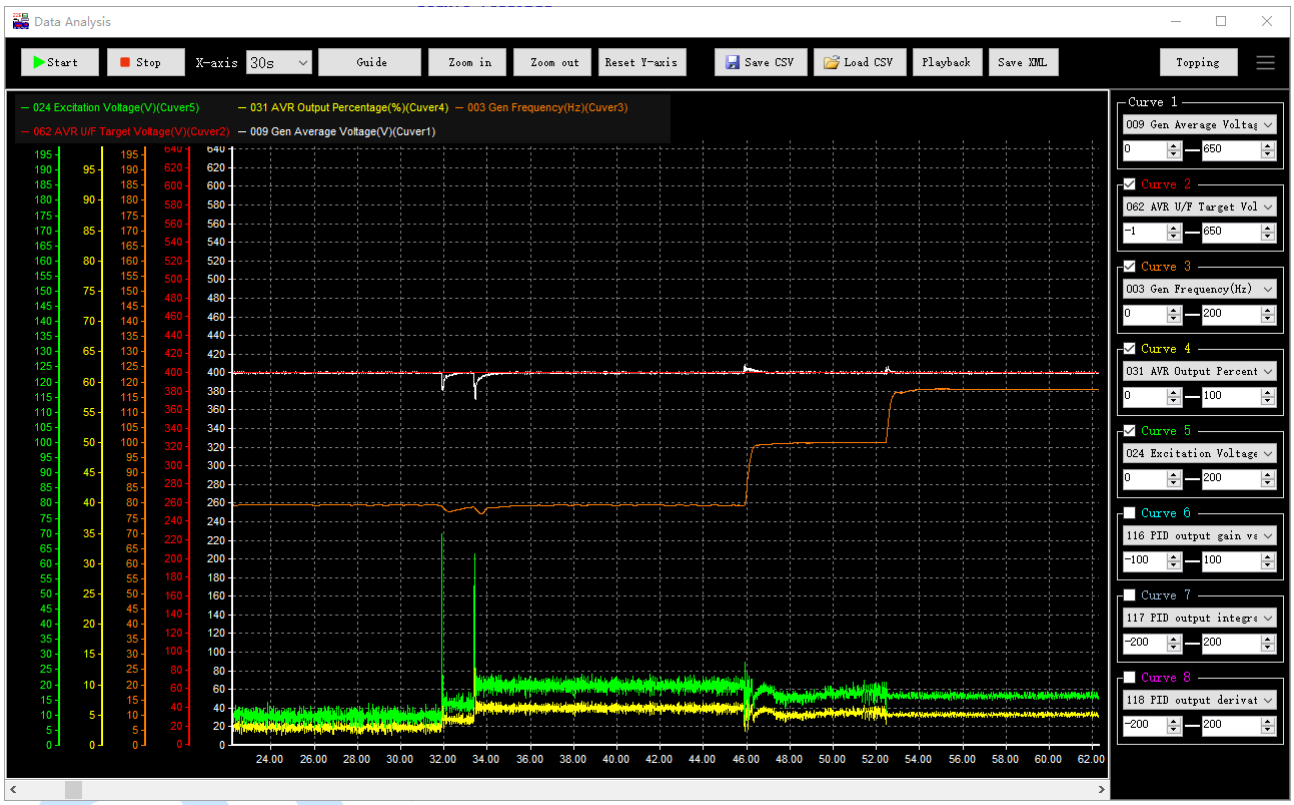

Fig.22 Real-time Data Analysis Diagram on PC Software

10 COMMISSIONING

Take AVR mode as the example to do commissioning.

- Check all the connection wires are correct and wires diameter is suitable.
- Set parameter (gen rated parameters, excitation mode, etc.) through USB interface via PC software or Bluetooth via mobile APP.
- Enable the threshold start mode, set initial duty cycle and proper PID parameter, and take appropriate protective measures, then start the genset. When gen voltage reaches start voltage, the voltage regulator enters soft start status. After soft starting, regulate PWM duty cycle and stabilize generator terminal voltage automatically according to U/F characteristic.
- When the regulator is working normally, sudden load/load dump test can be conducted, check the voltage curve, and adjust PID parameters to meet dynamic characteristic demand of generator.
- If there are any other questions, please contact SmartGen's service.

SmartGen

11 TYPICAL APPLICATION

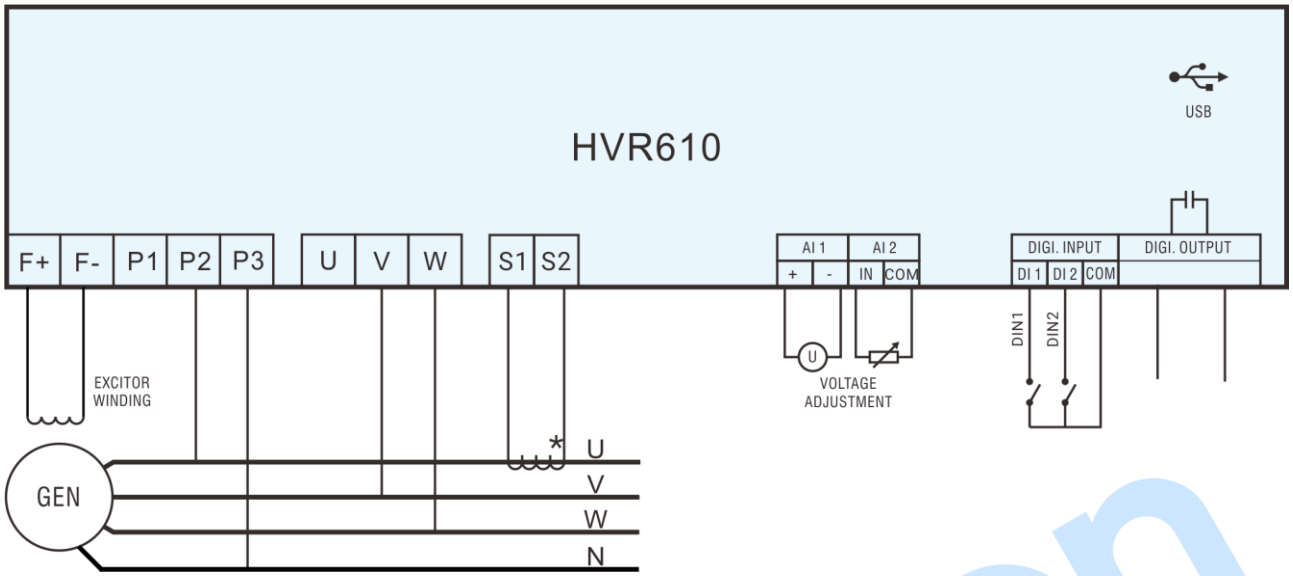

Fig.23 HVR610 (2-phase (V-W)) SHUNT/AUXW Typical Application Diagram

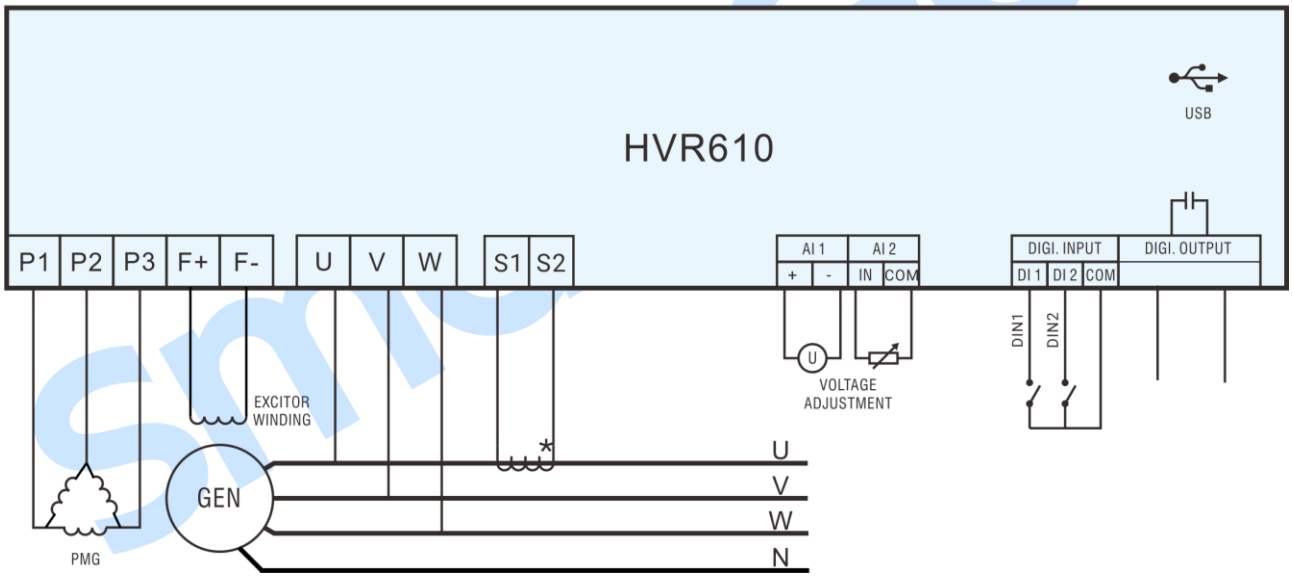

Fig.24 HVR610 (3P3W) PMG Typical Application Diagram

12 INSTALLATION

12.1 OVERALL AND INSTALLATION DIMENSION

Unit: mm

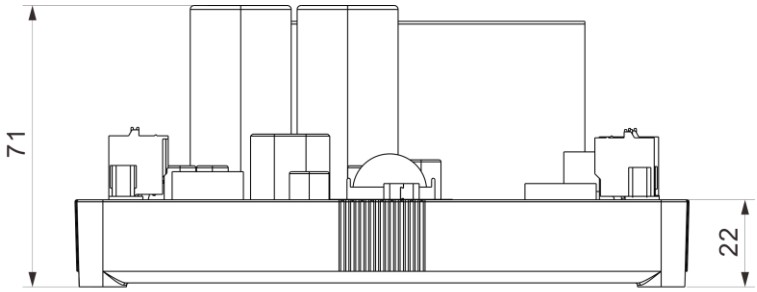

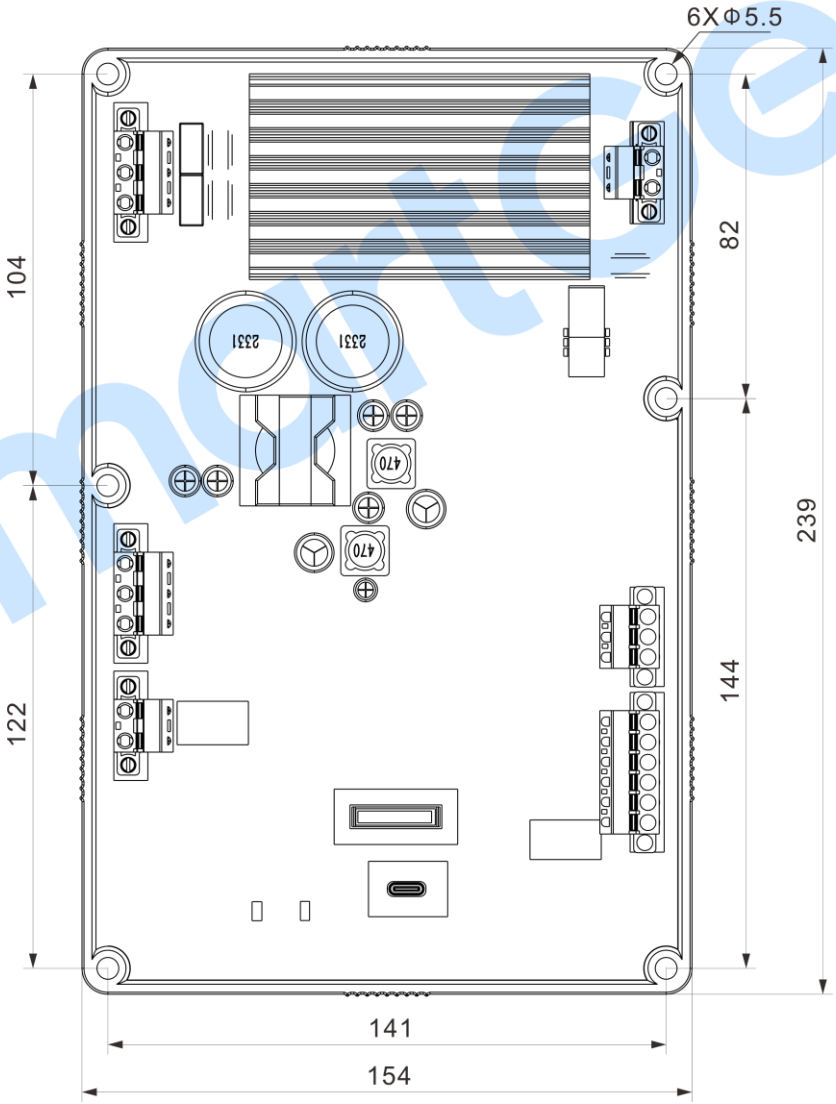

Fig.25 Overall and Installation Dimension

12.2 INSTALLATION METHOD AND WAY

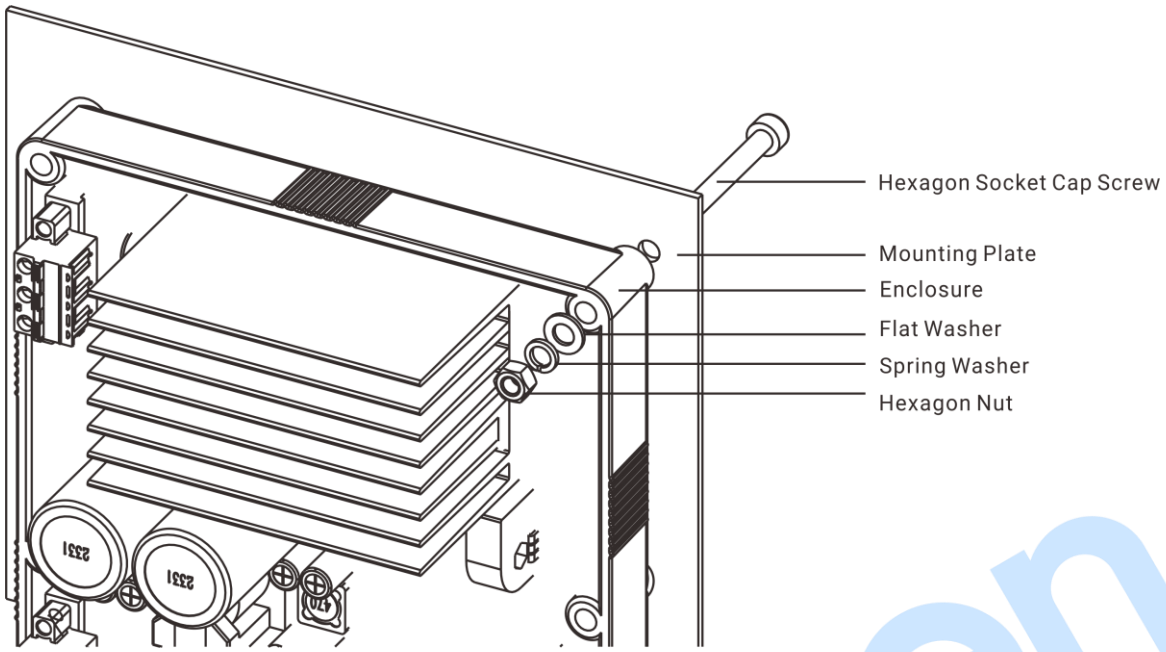

Fig.26 Installation Method

Recommended Installation Way

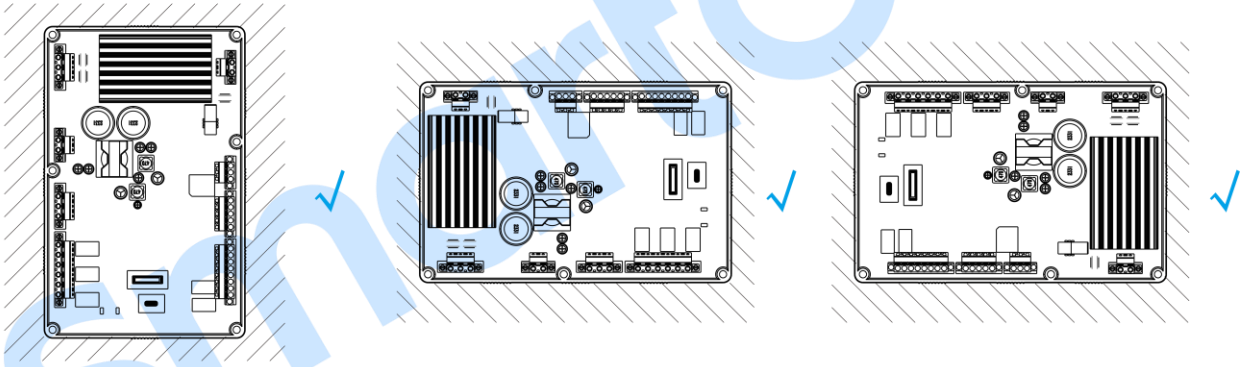

Vertical Installation
(heat sink is on the top)

Horizontal Installation

Forbidden Installation Way

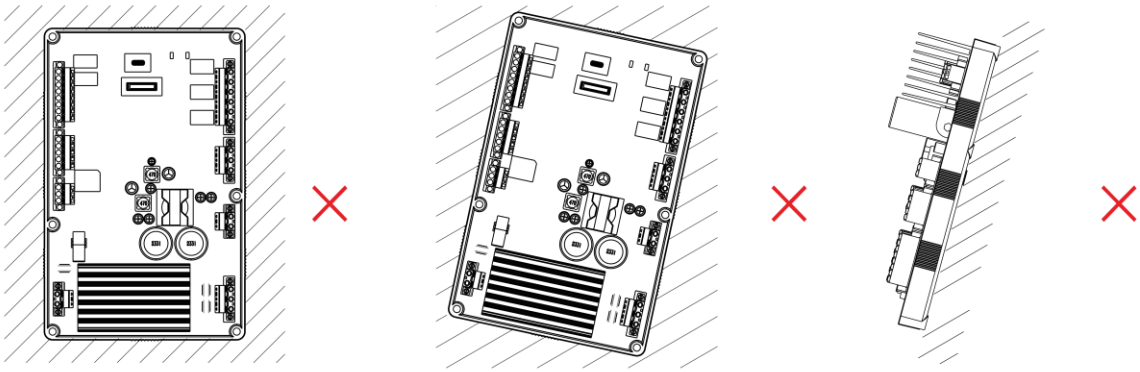

Vertical Installation
(heat sink is on the bottom)

Tilt Installation

Incline Installation

Fig.27 Installation Way

The power input of digital voltage regulator is connected to Terminal P1, P2 and P3, that is regulated by switching power through the internal rectification filter, and provides power to the voltage regulator, which can be single phase or three phases.

Output and Expansion Relay: All outputs are relay contact outputs. If the expansion relay is needed, freewheel diode (relay coil is DC) and resistor and capacitor circuit (relay coil is AC) shall be added to the two ends of the relay coils in order to prevent disturbing the controller or other equipment.

AC Input: Controller current input must be connected to outside current transformer. The secondary side current of the current transformer must be 5A or 1A, and at the same time, current transformer phase and input voltage phase must be correct, otherwise the collected current and active power maybe incorrect.

WARNING! When there is load current, open circuit of transformer's secondary side is prohibited.

SmartGen

13 FAULT FINDING

Table 13 Fault Finding

Symptoms	Possible Solutions
Regulator Non-operation Gen Terminal Voltage Unavailable	Check if the power connections are normal; Check if the power fuse is normal.
Gen Terminal Voltage Low	Check if the set rated gen voltage is correct; Check if the set U/F characteristic slope is correct; Check if the generator is running at rated speed.
Gen Terminal Voltage High	Check if the set rated gen voltage is correct; Check if the set U/F characteristic slope is correct; Check if the generator is running at rated speed.
Gen Terminal Voltage Instability	Check if the connections of gen terminal voltage are normal; Check if the PID parameter setting is proper, adjust PID parameter.
Alarm Indicator Flashing	Check PC to confirm the current alarm type and verify if the corresponding alarm threshold settings are configured correctly.

SmartGen

14 APPENDIX 1 SYMBOL AND TERM DEFINITION

Table 14 Symbol and Term Definition

Symbol	Term	Remark
AVR	Automatic voltage regulation mode	
FCR	Field current regulation mode	
VAR	Reactive power regulation mode	
PF	Power factor regulation mode	
LCF	Load compensation function	
F_{start}	Start frequency	
F_{knee}	Knee frequency	
F_{lcf}	Load compensation frequency	
F_{rated}	Rated frequency	
SLOPE	U/F slope	U/F characteristic
U_{lcf}	Load compensation voltage	Load compensation function
T_{lcf}	Load compensation time	
T_{rise}	Load compensation rise slope	
EV	Voltage fine-tuning deviation	
ER	Resistance fine-tuning deviation	
ET	Total deviation	
I_{FEL}	Forced excitation limit of field current	Details refer to description of over-excitation limit
I_{OEL}	Over-excitation limit	
I_E	Actual field current	
T_q	Allowing time of forced excitation	
t	Calculation value of inverse time	
B	Heat accumulation	
B_0	Max allowing heat accumulation	
I_{eq}	Equivalent stator current	Details refer to description of stator current limit
T_{eq}	Allowing delay under equivalent stator current	
I_{gL}	Max long time allowing stator current	
I_L	Actual stator current	
t_g	Calculation value of inverse time	