SmartGen

MAKING CONTROL SMARTER

HPM6-PPU/HPM6D/ HPM6D-PPU-RM

POWER MANAGEMENT CONTROLLER

USER MANUAL

郑州众智科技股份有限公司
SMARTGEN(ZHENGZHOU)TECHNOLOGY CO.,LTD.

SmartGen Registered Trademark
No. 28 Xuemei Street, Zhengzhou, Henan, China
Tel: +86-371-67988888/67981888/67992951
+86-371-67981000(overseas)
Fax: +86-371-67992952
Web: www.smartgen.com.cn/
www.smartgen.cn/
Email: sales@smartgen.cn

All rights reserved. No part of this publication may be reproduced in any material form (including photocopying or storing in any medium by electronic means or other) without the written permission of the copyright holder.
SmartGen reserves the right to change the contents of this document without prior notice.

Table 1 – Version History

Date	Version	Contents
2024-10-30	1.0	Original release.

This manual is suitable for HPM6-PPU/HPM6D/HPM6D-PPU-RM power management controller only.

Table 2 – Notation Clarification

Sign	Instruction
NOTE	Highlights an essential element of a procedure to ensure correctness.
CAUTION!	Indicates a procedure or practice, which, if not strictly observed, could result in damage or destruction of equipment.
WARNING!	Indicates a procedure or practice, which could result in injury to personnel or loss of life if not followed correctly.
X	Indicates the function of controller is unavailable.
√	Indicates the function of controller is available.

SmartGen

CONTENTS

1 OVERVIEW 7
2 MODEL CONFIGURATION 7
3 PERFORMANCE AND CHARACTERISTICS 7
4 FUNCTION DESCRIPTION 9
4.1 HPM6-PPU-DG FUNCTION DESCRIPTION 9
4.1.1 FUNCTION 9
4.1.2 PROTECTION 9
4.1.3 DISPLAY PANEL 9
4.1.4 POWER MANAGEMENT 9
4.2 HPM6-PPU-SG FUNCTION DESCRIPTION 10
4.2.1 OPERATION 10
4.2.2 PROTECTION 10
4.2.3 DISPLAY PANEL 11
4.2.4 POWER MANAGEMENT 11
4.3 HPM6-PPU-SC FUNCTION DESCRIPTION 11
4.3.1 OPERATION 11
4.3.2 PROTECTION 11
4.3.3 DISPLAY PANEL 12
4.3.4 POWER MANAGEMENT 12
4.4 HPM6-PPU-TR FUNCTION DESCRIPTION 12
4.4.1 OPERATION 12
4.4.2 PROTECTION 12
4.4.3 DISPLAY PANEL 13
4.4.4 POWER MANAGEMENT 13
4.5 HPM6-PPU-BTB FUNCTION DESCRIPTION 13
4.5.1 OPERATION 13
4.5.2 PROTECTION 14
4.5.3 DISPLAY PANEL 14
5 SPECIFICATION 15
6 OPERATION 18
6.1 PANEL DISPLAY 18
6.2 KEY FUNCTION DESCRIPTION 21
6.3 PARAMETERS SETTING 22
7 DG SYSTEM MODE DESCRIPTION 25
7.1 DG SYSTEM MODE 25
7.1.1 MANUAL MODE 25
7.1.2 SEMI-AUTO MODE 25
8 SG SYSTEM MODE DESCRIPTION 27
8.1 SG SYSTEM MODE 27
8.1.1 MANUAL MODE 27
8.1.2 SEMI-AUTO MODE 27

SmartGen

8.2 WORKING MODE DESCRIPTION 28
9 SC AND TR MODE DESCRIPTION 29
9.1 SC AND TR SYSTEM MODE 29
9.1.1 MANUAL MODE 29
9.1.2 SEMI-AUTO MODE 29
9.2 WORKING MODE DESCRIPTION 30
10 BTB MODE DESCRIPTION 31
10.1 BTB SYSTEM MODE 31
10.1.1 MANUAL MODE 31
10.1.2 SEMI-AUTO MODE 31
11 PROTECTION 32
12 HARDWARE STRUCTURE 46
12.1 STRUCTURE DESCRIPTION 46
12.2 HPM6D/HPM6D-PPU-RM MODULE 46
12.2.1 TERMINAL DESCRIPTION 46
12.2.2 TS #1 COMMUNICATION PORT 47
12.2.3 TS #2 RS485 COMMUNICATION, RELAY OUTPUT, POWER PORT 47
12.3 HPM6-PPU MODULE 48
12.3.1 TERMINAL DESCRIPTION 48
12.3.2 TS #1 POWER AND RELAY OUTPUT PORT 48
12.3.3 TS #2 CANBUS AND RS485 COMMUNICATION PORT 49
12.3.4 TS #3 ANALOG OUTPUT PORT 49
12.3.5 TS #4 TRIODE OUTPUT PORT 50
12.3.6 TS #5 ANALOG INPUT PORT 50
12.3.7 TS #6, TS #7 DIGITAL INPUT PORT 51
12.3.8 TS #8, TS #9, TS #10 GEN/BUS VOLTAGE, GEN/EARTH CURRENT INPUT PORT 52
12.3.9 COMMUNICATION PORT 52
12.4 WIRE CONNECTION 53
12.4.1 TYPICAL APPLICATION DIAGRAM 53
12.4.2 AC WIRE CONNECTION (3 PHASE 4 WIRE) 53
12.4.3 AC WIRE CONNECTION (SINGLE PHASE) 54
12.4.4 AC WIRE CONNECTION (2 PHASE 3 WIRE) 54
12.4.5 ANALOG INPUT PORT 55
12.4.6 MSC NETWORK COMMUNICATION PORT 55
12.4.7 MSC APPLICATION DIAGRAM 56
13 POWER MANAGEMENT AND WORKFLOW CHART 58
13.1 ILLUSTRATION 58
13.2 EQUAL LOAD SHARING MODE 58
13.3 FIXED POWER OUTPUT MODE 58
13.4 LOAD TAKEOVER MODE 59
13.5 SYNCHRONIZATION 59
13.6 HEAVY CONSUMER INQUIRY 60
13.6.1 ILLUSTRATION ..... 错误!未定义书签。
13.6.2 HEAVY CONSUMER REQUEST 60

13.6.3 HEAVY CONSUMER RESPONSE 60
13.6.4 HEAVY CONSUMER PERMISSION 60
13.6.5 HEAVY CONSUMER FEEDBACK 61
13.7 NON ESSENTIAL LOAD (NEL) TRIP 64
13.8 WORKFLOW CHART 65
13.8.1 START 65
13.8.2 STOP 66
13.8.3 CLOSE BREAKER 67
13.8.4 OPEN BREAKER 68
13.8.5 HEAVY CONSUMER 69
14 PARAMETER SETTINGS 70
14.1 ILLUSTRATION 70
14.2 MODULE SETTING 70
14.3 BUS SETTING 74
14.4 GENERATOR SETTING 79
14.5 GENERATOR LOAD SETTING 88
14.6 TIMER SETTING 101
14.7 ANALOG INPUT PORTS SETTING 102
14.8 DIGITAL INPUT PORTS SETTING 106
14.9 DIGITAL OUTPUT PORTS SETTING 117
14.10 ANALOG OUTPUT PORTS SETTING 135
14.11 GB SETTING 138
14.12 SYNCHRONIZATION SETTING 139
14.13 SYNCHRONOUS CALIBRATION 142
14.14 ENGINE SETTING 147
14.15 DISPLAY SETTING 147
14.16 USER-DEFINED PROTOCOL FORM SETTING 148
14.17 DIN16 SETTING 149
14.18 DOUT16 SETTING 151
14.19 USER-DEFINED PROTOCOL SETTING 153
15 COMMISSIONING 154
15.1 STEP 1: SINGLE UNIT DEBUGGING 154
15.2 STEP 2: SEMI-AUTO PARALLEL OPERATION OFF-LOAD 154
15.3 STEP 3: SEMI-AUTO PARALLEL OPERATION ON-LOAD 154
16 INSTALLATION 155
17 FAULT FINDING 157

SmartGen

1 OVERVIEW

HPM6-PPU/HPM6D/HPM6D-PPU-RM power management controller is a special power management system for marine applications. The system carries out genset control, protection, power detection functions. The system is a true multi-master system whose power management function is realized by the calculation of all generator control units. One of the control units is internally defined as the “command unit”, which is responsible for the calculation of the genset power management.

HPM6-PPU can realize the start/stop, synchronization and load sharing for up to 20 gensets. Each control unit is connected via network bus communication, which has device level ring redundancy function.

2 MODEL CONFIGURATION

According to the function of controllers, it is defined as main diesel genset power management controller (DG), shaft genset power management controller (SG), shore power management controller (SC), transformer power management controller (TR), and bus tie breaker controller (BTB). All controllers share one set of hardware (master control module + display module).

3 PERFORMANCE AND CHARACTERISTICS

HPM6-PPU power management controller adopts split-type design, which is composed of display module HPM6D/HPM6D-PPU-RM and master control module HPM6-PPU.

- 4.3-inch LCD, 480x272 resolution with backlight, Chinese, English and other languages display interface;
- Suitable for 3-phase 4-wire, 3-phase 3-wire, 2-phase 3-wire and single phase systems with frequency 50/60Hz;
- PLC function enables user to define control logic;
- User-defined system SLD function;
- 3-level password protection, two password permissions can customize user configuration items, i.e. configuration items that user can modify can be customized;
- 3 accumulated data, two user accumulated data (user A and user B), user can clear accumulated data. 3 accumulated data are simultaneously and synchronously calculated, but user A and user B data can be cleared at any time;
- Parameter setting: parameters can be modified, most of them can be configured from front panel of the controller and all of them can be configured using PC via USB, RS485 or RJ45 ports;
- Alarm log, which cannot be lost even in case of power outage, maximum 500 pieces can be recorded;
- Event log, which cannot be lost even in case of power outage, maximum 500 pieces can be recorded;
- User-defined protocol content function;
- User-defined bus data function, can read other genset controller data from one controller;
- Harmonic analysis and generator voltage, current waveform display function;
- Monitor data curve at real time;

- Black box function, record data before and after alarm, do data analysis and find problem via PC software;
- Master control module can record USB, open USB record via PC software can do data analysis;
- Display module can open USB, save configuration files.

SmartGen

4 FUNCTION DESCRIPTION

4.1 HPM6-PPU-DG FUNCTION DESCRIPTION

4.1.1 FUNCTION

- Support up to 16 master diesel gensets
- Load distribution (load sharing, fixed power output) between diesel gensets
- 4 heavy consumer inquiry for each controller
- Drop power (run at the set percentage of rated power)
- Start/stop control
- Synchronous close
- Soft loading/unloading
- Engine speed adjusting control: relay output, analog voltage output, analog current output
- Genset voltage adjusting control: relay output, analog voltage output, analog current output

4.1.2 PROTECTION

- Over current, 6-level
- Reverse power, 2-level
- Over power, 2-level
- Over voltage, 3-level
- Under voltage, 3-level
- Over frequency, 3-level
- Under frequency, 3-level
- Unbalanced voltage, 2-level
- Unbalanced current, 2-level
- ROCOF, 2-level
- Vector shift, 2-level
- Loss of excitation, 2-level
- Power factor low, 2-level
- Voltage single and total harmonics, 2-level
- Current single and total harmonics, 2-level
- Earth fault, 2-level
- Unbalanced active power distribution, 2-level
- Unbalanced reactive power distribution, 2-level
- Loss of phase and reverse phase sequence
- Close/open failure
- Digital inputs

4.1.3 DISPLAY PANEL

- Directional keys, confirm key and return key
- Status, alarm and information text messages

4.1.4 POWER MANAGEMENT

- NEL priority trip (3-way for single unit)
- Reserved running gensets, minimum on-load running gensets on the bus

SmartGen

- Safety stop, safety trip
- Limited on-grid gensets
- Bus breaking handling
- Shore power handling

4.2 HPM6-PPU-SG FUNCTION DESCRIPTION

4.2.1 OPERATION

- Support up to 4 shaft gensets
- Load distribution (load sharing, fixed power output) between shaft gensets and diesel gensets
- 4 heavy consumer inquiry for each controller
- Drop power (run at the set percentage of rated power)
- Start/stop control
- Synchronous close
- Soft loading/unloading
- SG/DG load transfer
- Engine speed adjusting control: relay output, analog voltage output, analog current output
- Genset voltage adjusting control: relay output, analog voltage output, analog current output

4.2.2 PROTECTION

- Over current, 6-level
- Reverse power, 2-level
- Over power, 2-level
- Over voltage, 3-level
- Under voltage, 3-level
- Over frequency, 3-level
- Under frequency, 3-level
- Unbalanced voltage, 2-level
- Unbalanced current, 2-level
- ROCOF, 2-level
- Vector shift, 2-level
- Loss of excitation, 2-level
- Power factor low, 2-level
- Voltage single and total harmonics, 2-level
- Current single and total harmonics, 2-level
- Earth fault, 2-level
- Unbalanced active power distribution, 2-level
- Unbalanced reactive power distribution, 2-level
- Loss of phase and reverse phase sequence
- Close/open failure
- Digital inputs
- DG insufficient capacity
- SG insufficient capacity
- SG and DG paralleled number over limit
- SG and DG grid-connection timeout

4.2.3 DISPLAY PANEL

- Directional keys, confirm key and return key
- Status, alarm and information text messages

4.2.4 POWER MANAGEMENT

- Work mode selection
  - ► Load takeover mode
  - ► Fixed power mode
  - ► Load sharing mode
- NEL priority trip (3-way for single unit)
- Safety stop, safety trip
- Limited on-grid gensets
- Bus breaking handling

4.3 HPM6-PPU-SC FUNCTION DESCRIPTION

4.3.1 OPERATION

- Support up to 4-way connections of shore power
- 4 heavy consumer inquiry for each controller
- Synchronous close
- Soft loading/unloading
- SC/DG load transfer
- Engine speed adjusting control: It is indirect speed control, which sends a speed adjustment request signal through the bus. The genset requiring speed adjustment receives the speed adjustment signal and adjusts the speed according to the SC target value.
- Genset voltage adjusting control: It is indirect voltage control, which sends a voltage adjustment request signal through the bus. The genset requiring voltage adjustment receives the voltage adjustment signal and adjusts the voltage according to the SC target value.

4.3.2 PROTECTION

- Over current, 6-level
- Reverse power, 2-level
- Over power, 2-level
- Over voltage, 3-level
- Under voltage, 3-level
- Over frequency, 3-level
- Under frequency, 3-level
- Unbalanced voltage, 2-level
- Unbalanced current, 2-level
- ROCOF, 2-level
- Vector shift, 2-level
- Loss of excitation, 2-level
- Power factor low, 2-level
- Voltage single and total harmonics, 2-level
- Current single and total harmonics, 2-level

- Earth fault, 2-level
- Unbalanced active power distribution, 2-level
- Unbalanced reactive power distribution, 2-level
- Loss of phase and reverse phase sequence
- Close/open failure
- Digital inputs
- SC insufficient capacity
- SC and DG paralleled number over limit
- SC and DG grid-connection timeout

4.3.3 DISPLAY PANEL

- Directional keys, confirm key and return key
- Status, alarm and information text messages

4.3.4 POWER MANAGEMENT

- Work mode selection
  - ► Load takeover mode
  - ► Fixed power mode
  - ► Load sharing mode
- NEL priority trip (3-way for single unit)
- Safety stop, safety trip
- Limited on-grid gensets
- Bus breaking handling

4.4 HPM6-PPU-TR FUNCTION DESCRIPTION

4.4.1 OPERATION

- Support up to 4-way connection of transformer
- 4 heavy consumer inquiry for each controller
- Synchronous close
- Soft loading/unloading
- TR/DG load transfer
- Engine speed adjusting control: It is indirect speed control, which sends a speed adjustment request signal through the bus. The genset requiring speed adjustment receives the speed adjustment signal and adjusts the speed according to the TR target value.
- Genset voltage adjusting control: It is indirect voltage control, which sends a voltage adjustment request signal through the bus. The genset requiring voltage adjustment receives the voltage adjustment signal and adjusts the voltage according to the TR target value.

4.4.2 PROTECTION

- Over current, 6-level
- Reverse power, 2-level
- Over power, 2-level
- Over voltage, 3-level

- Under voltage, 3-level
- Over frequency, 3-level
- Under frequency, 3-level
- Unbalanced voltage, 2-level
- Unbalanced current, 2-level
- ROCOF, 2-level
- Vector shift, 2-level
- Loss of excitation, 2-level
- Power factor low, 2-level
- Voltage single and total harmonics, 2-level
- Current single and total harmonics, 2-level
- Earth fault, 2-level
- Unbalanced active power distribution, 2-level
- Unbalanced reactive power distribution, 2-level
- Loss of phase and reverse phase sequence
- Close/open failure
- Digital inputs
- TR insufficient capacity
- TR and DG paralleled number over limit
- TR and DG grid-connection timeout

4.4.3 DISPLAY PANEL

- Directional keys, confirm key and return key
- Status, alarm and information text messages

4.4.4 POWER MANAGEMENT

- Work mode selection
  - ► Load takeover mode
  - ► Fixed power mode
  - ► Load sharing mode
- NEL priority trip (3-way for single unit)
- Safety stop, safety trip
- Limited on-grid gensets
- Bus breaking handling

4.5 HPM6-PPU-BTB FUNCTION DESCRIPTION

4.5.1 OPERATION

- Support up to 6 bus tie breaker controllers
- Synchronous close
- Safety open
- Engine speed adjusting control: It is indirect speed control, which sends a speed adjustment request signal through the bus. The genset requiring speed adjustment receives the speed adjustment signal and adjusts the speed according to the target value.

● Genset voltage adjusting control: It is indirect voltage control, which sends a voltage adjustment request signal through the bus. The genset requiring voltage adjustment receives the voltage adjustment signal and adjusts the voltage according to the target value.

4.5.2 PROTECTION

● Over current, 6-level
● Close/open failure
● Digital inputs
● Synchronization failure
● Breaker status monitoring and protection

4.5.3 DISPLAY PANEL

● Directional keys, confirm key and return key
● Status, alarm and information text messages

SmartGen

5 SPECIFICATION

Table 3 – Specification Parameters

Item	Content
Working Voltage	Range: DC8V - DC35V continuous power supply, DC reverse connection protection Resolution: 0.1V Accuracy: 1%
Overall Consumption	Display: <4W (standby: ≤2.5W) Master control: <8W (standby: ≤5W)
AC Voltage	Phase Voltage Range: AC15V - AC520V (ph-N) Resolution: 0.1V Accuracy: 0.5%
	Line Voltage Range: AC30V - AC900V (ph-ph) Resolution: 0.1V Accuracy: 0.5%
AC Frequency	Range: 5Hz - 75Hz Resolution: 0.01Hz Accuracy: 0.1Hz
AC Current	Rated: 5A Range: 0A - 15A Resolution: 0.1A Accuracy: 0.5%
Analog Inputs	Resistance Input Range: (0 - 6000)Ω Resolution: 0.1 Accuracy: 1Ω (below 300Ω)
	Voltage Input Range: (0 - 5)V Resolution: 0.001V Accuracy: 0.5%
	Current Input Range: (0 - 20)mA Resolution: 0.001mA Accuracy: 0.5%
Analog Outputs	Current Output Range: (-20 - 20)mA Resolution: 0.001mA Accuracy: 0.5%
Digital Output Port 1-2	8A DC30V Volt-free (relay output)

Item	Content
Digital Output Port 3-4	8A DC30V Active (relay output)
Digital Output Port 5	8A DC30V Volt-free (relay output)
Digital Output Port 6-7	7A DC30V Volt-free (relay output)
Digital Output Port 8-20	1A DC30V DC (transistor output)
Digital Input Port 1-20	Low on threshold voltage 4.6V, max. input voltage 60V
RS485 Port	Isolated, half-duplex, 9600bps, max. communication distance 1000m
Ethernet	Self-adaption, 10/100Mbit
MSC CAN Port	Isolated, max. communication distance 250m, use Belden 9841 cable or equivalence
CE-EMC Certificate	EN 55032, EN 55024
Vibration	5Hz~8Hz: displacement=±7.5mm 8Hz~500Hz: a=±2g IEC 60068-2-6
Shock	50g, 11ms, half-sine, three consecutive shocks are applied in each of the three mutually perpendicular directions, i.e., a total of 18 times. IEC 60068-2-27
Bump	25g, 16ms, half-sine IEC 60255-21-2
Safety Requirements	According to EN 61010-1 installation category (over voltage category) III, 300V, pollution class 2, altitude 3000m
Case Dimensions	HPM6D/HPM6D-PPU-RM: 220mm x 130mm x 52mm HPM6-PPU: 250mm x 165mm x 83mm
Panel Cutout	HPM6D/HPM6D-PPU-RM: 201mm x 111mm, embedded panel installation HPM6-PPU: aperture φ5.5 x 4, hole distance 237.5mm x 152.5mm, screw fixed installation
Working Temperature	(-25~+70)°C
Work Humidity	(20~93)%RH
Storage Temperature	(-30~+80)°C
Protection Level	HPM6D/HPM6D-PPU-RM display module: front panel IP65, back panel IP20 when waterproof rubber ring is added between controller and control panel. HPM6-PPU master control module: IP20
Insulation Intensity	Apply AC2.2kV voltage between high voltage terminal and low voltage terminal, leakage current is less than 3mA within 1min.
Product Standard	GB/T 2820.4-2009 Reciprocating internal combustion engine driven alternating current generating sets - Part 4: Control gear and switchgear GB/T 10250-2007 Electrical and electronic installations in ships – Electromagnetic compatibility GD 22-2015 Guidelines for type approval test of electric and electronic products E-14-2015 Generator protection gear, power station automatic control gear

Item	Content
	Rules for classification of sea-going steel ships 2015, Volume 4, Part 7: Automatic system Rules for classification of sea-going steel ships 2015, Volume 4, Part 4: Electric device, chapter 2, section 5 System protection
Weight	HPM6D/HPM6D-PPU-RM display module 0.57kg; HPM6-PPU master control module 1.31kg.

SmartGen

6 OPERATION

6.1 PANEL DISPLAY

This user manual is suitable for two types of display modules: HPM6D and HPM6D-PPU-RM. The LCD of both display modules is 4.3-inch TFT with a resolution of 480*272. These two display modules are designed to be used with the HPM6-PPU processing unit, providing flexible and diverse display solutions. Please choose the appropriate display module on your specific needs.

HPM6D: Standard display module with all operational keys, which is suitable for applications that require direct control and interaction.

HPM6D-PPU-RM: Simplified display module, which removes some operational keys compared to the HPM6D. It is suitable for applications that does not require direct control operation or has already been controlled through other methods.

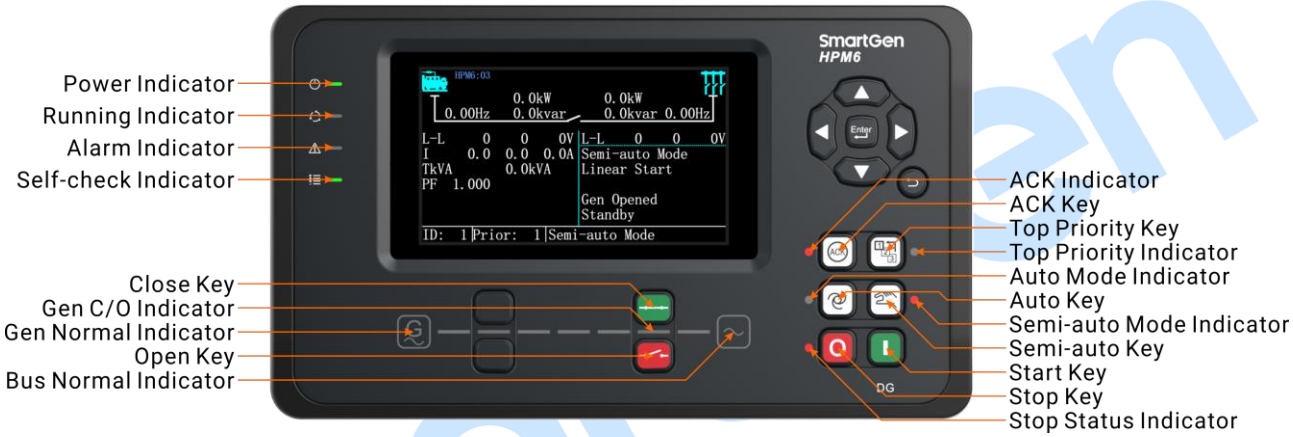

Fig.1 – HPM6D Display Panel

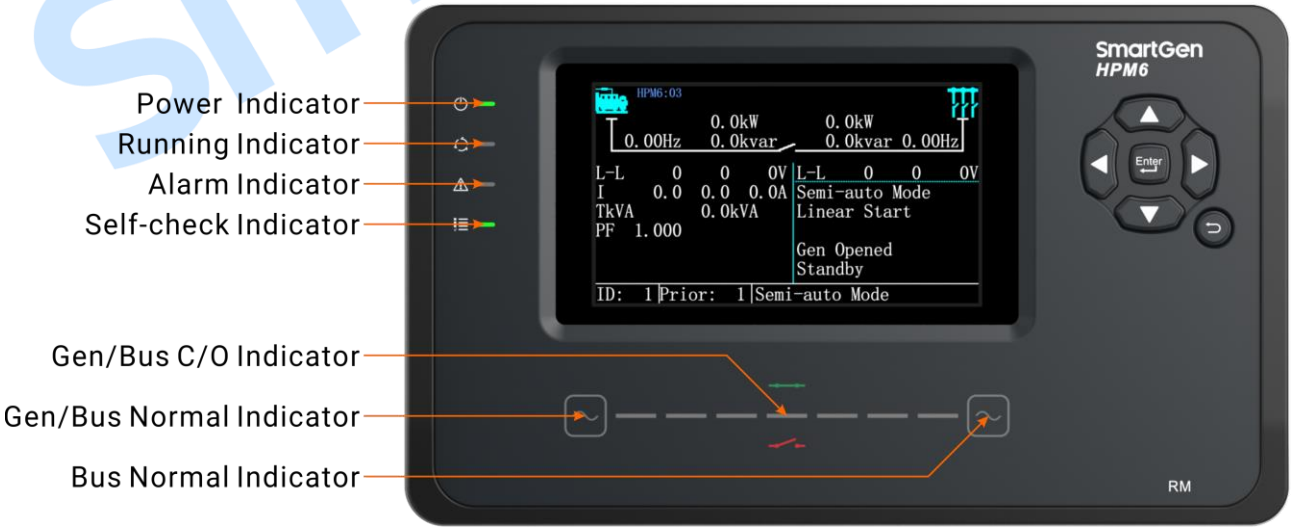

Fig.2 – HPM6D-PPU-RM Display Panel

Table 4 – Alarm Indicator Introduction

Alarm Type	Indicator Color	Indicator Status
Indication Alarm	Green	Slowly flash (once per second)
Warning Alarm	Yellow	Slowly flash (once per second)
Block Alarm	Yellow	Slowly flash (once per second)
Safety Trip Alarm	Red	Fast flash (twice per second)
Safety Trip and Stop Alarm	Red	Fast flash (twice per second)
Trip Alarm	Red	Fast flash (twice per second)
Trip and Stop Alarm	Red	Fast flash (twice per second)

NOTE 1: Alarm Indicator (red, green, yellow): flashes when alarm is not acknowledged, always illuminates when alarm is acknowledged but not disappear, extinguishes when the alarm is disappeared;

NOTE 2: Power Indicator (green): green light always illuminates when the power is normal;

NOTE 3: Running Indicator (red and green, yellow represents green and red lights are illuminated simultaneously):

Green light always illuminates: genset is normally running;

Red light always illuminates: ready to start signal abnormal or genset in start inhibit status;

Yellow light always illuminates: genset normal running, but standby engine starts signal abnormal or genset in start inhibit status;

Light off: genset standby and normal running;

NOTE 4: Self-check Indicator (green): green light illuminates when self-check is normal;

NOTE 5: Gen/Bus Normal Indicator (green): it always illuminates when generating or bus power is normal, flashes when generating or bus power is abnormal, extinguishes when there is no generating or bus power;

NOTE 6: Bus Normal Indicator (green): it always illuminates when bus is normal, extinguishes when bus is abnormal or bus voltage blackout.

SmartGen

Table 5 – Switch Status Indicator Introduction

Alarm Type	Alarm Indicator Status
Opened	All lights between gen/bus indicator and bus indicator (except for gen/bus c/o indicator) illuminate according to gen and bus status.
Closed	All lights between gen/bus indicator and bus indicator always illuminate.
Synchronous Closing	All lights between gen/bus indicator and bus indicator cycle illuminate from left to right.
Soft-loading	All lights between gen/bus indicator and bus indicator cycle illuminate from left to right.
Soft Unloading Opening	All lights between gen/bus indicator and bus indicator cycle illuminate from right to left.
Close Failure	All lights between gen/bus indicator and bus indicator flash.
Open Failure	All lights between gen/bus indicator and bus indicator flash.
Close Feedback Failure	All lights between gen/bus indicator and bus indicator always illuminate, but gen/bus c/o indicator flashes.
Open Feedback Failure	All lights between gen/bus indicator and bus indicator always illuminate, but gen/bus c/o indicator flashes.

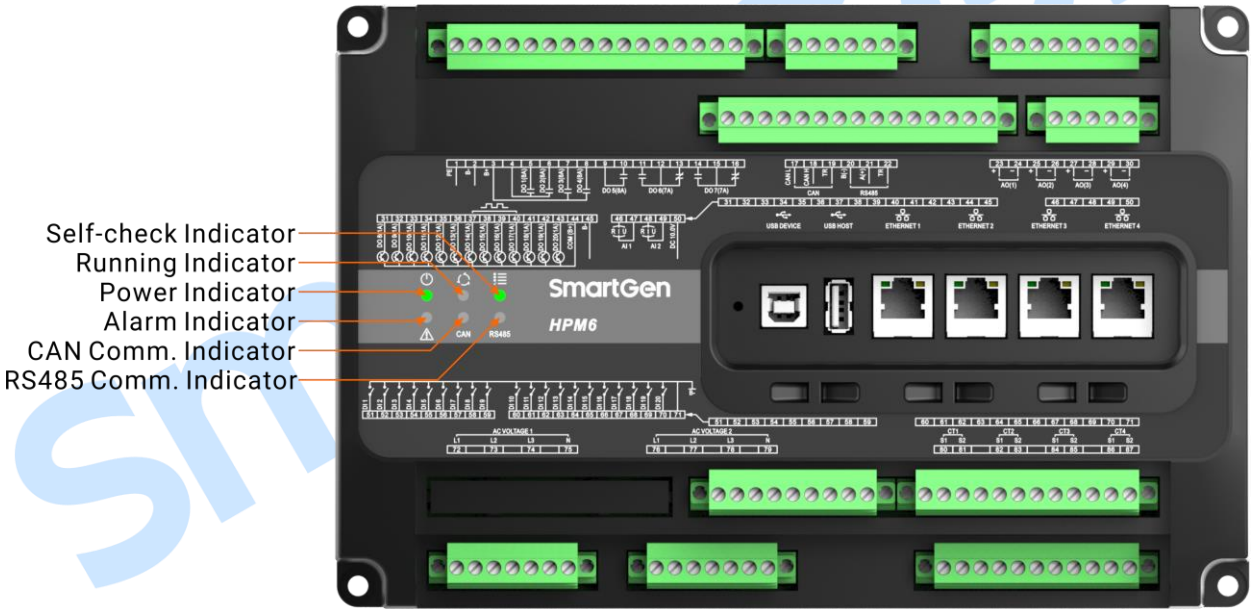

Fig.3 – HPM6-PPU Master Control Panel

NOTE1: Power Indicator (red, green, yellow): green light always illuminates when power is normal, yellow light always illuminates when power is abnormal;

NOTE2: Running Indicator (red and green, yellow represents green and red light simultaneously): refer to display module indicator description;

NOTE3: Self-check Indicator (green): green light illuminates when self-checking is normal;

NOTE4: Alarm Indicator (red, green, yellow): refer to display module indicator description;

NOTE5: CAN Communication Indicator (green): flashes in communication, extinguishes in other periods;

NOTE6: RS485 Communication Indicator (green): flashes in communication, extinguishes in other periods.

6.2 KEY FUNCTION DESCRIPTION

Table 6 – Key Description

Icon	Key	Description
	Stop	Open and stop the parallel running genset in Semi-auto mode. Lamp test (press at least 3s).
	Start	Start the standby genset in Semi-auto mode.
	Semi-auto	Press this key and controller enters **Semi-auto** mode.
	Auto	Press this key and controller enters **Auto** mode.
	Top Priority	Place current genset at the highest priority by pressing the key. Start current genset first under corresponding running mode. Details refer to top priority indicator description.
	ACK	Press it to fast switch to alarm interface, press it in alarm interface to acknowledge all alarms, alarm indicator changes from flash to flat.
	Close	Control breaker synchronous close in **Semi-auto** mode.
	Open	Control breaker unloading open in **Semi-auto** mode.
	Up/Increase	1. Screen scroll; 2. Up cursor and increase value in setting menu.
	Down/Decrease	1. Screen scroll; 2. Down cursor and decrease value in setting menu.
	Left	1. Page scroll; 2. Left move cursor in setting menu.
	Right	1. Page scroll; 2. Right move cursor in setting menu.
	Set/Confirm	1. Press it more than 3s and enter parameter setting menu; 2. In setting menu, confirm the set value; 3. Alarm interface can acknowledge and unlock alarms.
	Exit	1. Return to first interface; 2. Return to previous menu in setting menu.

NOTE: Press any key in the main interface can mute sound.

SmartGen

6.3 PARAMETERS SETTING

Press Enter key for more than 3s to enter into user menu.

★ Parameter setting

After entering the correct password, you can enter parameter settings interface.

Password can be divided into 3 levels: one highest level (engineer, default is 00318) and two user-defined levels (technician, default is 00317; operator, default is 00316). After entering highest level password, all configuration items can be set; after entering user-defined level password, users can only configure parameters within the permission field.

Parameter setting includes the following contents:

★ Module setting
★ Bus setting
★ Generator setting
★ Generator load setting
★ Timers setting
★ Analog inputs setting
★ Digital inputs setting
★ Digital outputs setting
★ Analog outputs setting
★ Breaker setting
★ Synchronization setting
★ Synchronous calibration
★ SLD setting (only configure via upper computer)
★ Engine setting
★ Display module setting
★ 1# DIN16 setting
★ 2# DIN16 setting
★ 1# DOUT16 setting
★ 2# DOUT16 setting

Example:

Return Module setting Bus setting Generator setting Generator load setting **Timers setting >** Analog inputs setting Digital inputs setting Digital outputs setting Analog outputs setting Breaker setting	>Start delay >Stop delay >Start output time >Stop output time >Wait for start time >Wait for stop time >Load stable time >Transient fault delay >Alarm start delay >Trigger start delay >Alarm stop delay	Interface 1: Use ▲ ▼ to change setting contents, Enter to enter settings (interface 2), ↩ to exit settings menu.

Return Module setting Bus setting Generator setting Generator load setting **Timers setting >** Analog inputs setting Digital inputs setting Digital outputs setting Analog outputs setting Breaker setting	**>Start delay** >Stop delay >Start output time >Stop output time >Wait for start time >Wait for stop time >Load stable time >Transient fault delay >Alarm start delay >Trigger start delay >Alarm stop delay	Interface 2: Use ▲ ▼ to change setting contents, Enter to enter settings (interface 3), ↩ to return to previous menu. (interface 1)

Return Module setting Bus setting Generator setting Generator load setting **Timers setting >** Analog inputs setting Digital inputs setting Digital outputs setting Analog outputs setting Breaker setting	>Start delay **>Stop delay** >Start output time >Stop output time >Wait for start time >Wait for stop time >Load stable time >Transient fault delay >Alarm start delay >Trigger start delay >Alarm stop delay	Interface 3: Use ▲ ▼ to change setting contents, Enter to confirm settings (interface 4), ↩ to return to previous menu. (interface 1).

>Start delay **>Stop delay** >Start output time >Stop output time >Wait for start time >Wait for stop time >Load stable time >Transient fault delay >Alarm start delay >Trigger start delay >Alarm stop delay	**00005**	Interface 4: Press Enter to enter settings (interface 5), ↩ to return to previous menu. (interface 3).

>Start delay **>Stop delay** >Start output time >Stop output time >Wait for start time >Wait for stop time >Load stable time >Transient fault delay >Alarm start delay >Trigger start delay >Alarm stop delay	**00005**	Interface 5: Press ◀ ▶ to change cursor position, ▲ ▼ are used for changing cursor value, Enter to confirm setting and the setting will be stored in internal memory automatically; ↩ to exit setting.

SmartGen

7 DG SYSTEM MODE DESCRIPTION

7.1 DG SYSTEM MODE

7.1.1 MANUAL MODE

When manual mode signal is active, the system will enter manual mode. In this mode, HPM6-PPU controller can only monitor data and issue alarms but cannot control switch or genset. In addition, GOV and AVR do not work but the manual GOV IN, manual GOV OUT, manual AVR IN and manual AVR OUT do work in this mode.

7.1.2 SEMI-AUTO MODE

When semi-auto mode input signal is active, the system will enter semi-auto mode. In this mode, the control unit will not initiate any control sequences automatically. It will only initiate sequences if external signal is given and alarm protection function is always active.

The external command signal may be given in two ways:

1. Digital inputs
2. Modbus command

In semi-auto mode, all available genset control units can control the start/stop/synchronously closed/unloaded open of genset by “Digital Input” or “Modbus Command”.

The system monitors that if gensets are overloaded. Should that be the case, the Non Essential Load (NEL) trip will activate to maintain power supply to bus.

If a heavy consumer is requested, the system will calculate the power needed. If the available power is insufficient, the heavy consumer connection will not be allowed.

Semi-auto Start:

a) When remote start input signal is active, HPM6-PPU will initiate a start command. The system enters into “Start Output Delay” while the start relay will activate;
b) When “Start Output Delay” is over, “Wait for Start Delay” will be initiated. “Fail to Start” block alarm will be initiated if measured generator voltage and frequency do not reach the set value after start wait delay is over;
c) “Load Stable Delay” will be initiated when crank disconnect conditions are reached during start wait delay process. “Frequency/Voltage Fault” block alarm and shutdown will be initiated if generator voltage and frequency do not reach the set value after the “Load Stable Delay” has expired. It enters into “Normal Running” status if the on-load requirement has been achieved;
d) If the switch is not closed during the normal running status and the voltage/frequency has not satisfied the on-load requirement suddenly, “Transient Fault Delay” will be initiated. “Frequency/Voltage Fault” block alarm and shutdown will be initiated if the on-load requirement has not been achieved after the delay has expired. It enters into “Normal Running” status if the on-load requirement has been achieved during delay period;
e) Under normal running status, genset will close and synchronize automatically when the closing input signal is active; In case of single unit running, it will close breaker directly;
f) In case of multi-set operation, the genset will share load automatically;
g) If there is trip or shutdown alarm occurs, then the system will trip or stop and the corresponding alarm information will be displayed on the LCD.

Semi-auto Stop:

a) In breaker close status, when opening signal input is active, in case of multi-set operation, first of all, the system will transfer load and open breaker; in case of single unit running and semi-auto intelligent open is enabled, it cannot open, otherwise it will open directly;

b) In breaker open status, when remote stop input signal is active, system will enter into “Stop Output Delay” while the stop relay will activate;

c) After “Stop Output Delay” is over, system will enter into “Wait for Stop” delay. If genset voltage and frequency signals disappear during the delay, controller will judge that the genset stops and in standby state; otherwise, if genset voltage and frequency signals still can be detected after the delay expired, controller will judge that the genset fails to stop;

d) After genset fails to stop, if voltage and frequency signals are disappeared, controller will judge that the genset stops completely and enter standby status.

SmartGen

8 SG SYSTEM MODE DESCRIPTION

8.1 SG SYSTEM MODE

8.1.1 MANUAL MODE

When manual mode signal is active, the system will work through manual mode. In this mode, HPM6-PPU controller can only monitor data and alarm information but cannot control switch or genset. In addition, GOV and AVR do not work but the manual GOV IN, manual GOV OUT, manual AVR IN and manual AVR OUT do work in this mode.

8.1.2 SEMI-AUTO MODE

When semi-auto mode input signal is active, the system will enter semi-auto mode. In this mode, the control unit will not initiate any control sequences automatically. It will only initiate sequences if external signal is given and alarm protection function is always active.

The external command signal may be given in two ways:

1. Digital inputs
2. Modbus command

In semi-auto mode, all available genset control units can control the start/stop/synchronously closed/unloaded open of genset by “Digital Input” or “Modbus Command”.

The system detects whether gensets are overloaded. Should that be the case, the Non Essential Load (NEL) trip will activate to maintain power supply to bus.

If a heavy consumer is requested, the system will calculate the power needed. If the available power is insufficient, the heavy consumer connection will not be allowed.

Semi-auto Start:

a) When remote start input signal is active, the controller firstly judges the feedback state of the shaft solenoid valve closing (if configured). If the state is not detected, the shaft solenoid valve closing outputs (if configured) and will wait for the feedback state to be effective;

b) After the feedback signal of shaft solenoid valve closing is detected, HPM6-PPU initiates a start command and the system enters the “Start Output Delay”, during which the engine start relay outputs;

c) When “Start Output Delay” is over, “Wait for Start Delay” will be initiated. “Fail to Start” block alarm will be initiated if the measured generator voltage and frequency do not reach the set value after the delay has expired;

d) When this delay is over, “Load Stable Delay” will be initiated. “Frequency/Voltage Fault” block alarm and shutdown will be initiated if generator voltage and frequency do not reach the set value after the “Load Stable Delay” has expired. It will enter into “Normal Running” status if the on-load requirement has been achieved;

e) If the switch is not closed during the normal running status and the voltage/frequency has not satisfied the on-load requirement suddenly, “Transient Fault Delay” will be initiated. “Frequency/Voltage Fault” block alarm and shutdown will be initiated if the on-load requirement has not been achieved after the “Transient Fault Delay” has expired. It enters into “Normal Running” status if the on-load requirement has been achieved during delay period;

f) When the shaft genset is in normal running status, it will close and synchronize automatically when the closing input or SG on-load input signal is active;

g) It will judge whether the SG power can receive all the DG power when closing in load takeover mode. If not, the controller will initiate an alarm and stop the closing operation. If it meets the requirements, the DG will open and stop after all the loads are received by the SG (DG is effective in auto mode); In the fixed power mode, the controller synchronously closes and operates at fixed power and grid connection with DG;

h) If there is trip or shutdown alarm occurs, then the system will trip or stop and the corresponding alarm information will be displayed on the LCD.

Semi-auto Stop:

i) In close status, when the opening input or DG on-load input signal is active, the system will dispatch the DG starting (DG is effective in auto mode), judging whether DG power receives all the SG power, if not, controller will initiate an alarm and stop operations, if it meets the requirements, SG soft unloads and opens;

j) After breaker is opened or remote stop input signal is active in breaker open status, the system will enter into "Stop Output Delay" while the stop relay will activate;

k) After "Stop Output Delay" is over, system will enter into "Wait for Stop" delay. If genset voltage and frequency signals disappear during the delay, controller will judge that the genset stops and in standby state; otherwise, if genset voltage and frequency signals still can be detected after the delay expired, controller will judge that the genset fails to stop;

l) After genset fails to stop, if voltage and frequency signals are disappeared, controller will judge that the genset stops completely and enters into standby state.

8.2 WORKING MODE DESCRIPTION

Table 7 – Working Mode Description

Working Mode	Description	Semi-auto Mode	Manual Mode
Load Takeover Mode	After SG closing, all loads will be transferred to SG side, DG opens and stops; When SG opening, all loads will be transferred to DG side, SG opens and stops.	√	X
Fixed Power Mode	After SG closing, SG shares with parts of loads, DG shares the rest of power; When SG opening, all load will be transferred to DG side, SG opens and stops.	√	X
Load Sharing Mode	After SG closing, loads will be shared by SG and DG; When SG opening, all loads will be transferred to DG side, SG opens and stops.	√	X

NOTE: When in SG mode, outputs of GOV and AVR should be set as "none" if SG can not achieve speed governing.

9 SC AND TR MODE DESCRIPTION

9.1 SC AND TR SYSTEM MODE

SC and TR mode have the same function. When SC mode is selected and “Transformer Mode Enable” is active, the system transfers to the TR mode and the screen display changes to the transformer related content. The following takes SC mode as an example.

9.1.1 MANUAL MODE

When manual mode signal is active, the system will enter the manual mode. In this mode, HPM6-PPU controller can only monitor data and alarm information but cannot control switch or genset.

9.1.2 SEMI-AUTO MODE

When semi-auto mode input signal is active, the system will enter semi-auto mode.

In this mode, the control unit will not initiate any control sequences automatically. It will only initiate sequences if external signal is given and alarm protection function is always active.

The external command signal may be given in two ways:

1. Digital inputs
2. Modbus command

In semi-auto mode, all available SC control units can control the synchronously closed/unloaded open of shore power by external command.

The system detects whether shore power is overloaded. Should that be the case, the Non Essential Load (NEL) trip will activate to maintain power supply to bus.

If a heavy consumer is requested, the system will calculate the power needed. If the available power is insufficient, the heavy consumer connection will not be allowed.

Semi-auto Close:

m) After SC power is connected, if the controller detects that the voltage and frequency of SC power do not meet the on-load set values, the controller indicates “Transient Failure”. If the on-load condition is met, the controller enters the “Normal Running” status;

n) In the “Normal Running” status of the controller, if the voltage or frequency suddenly no longer meets the on-load condition, the controller indicates “Transient Failure”. If it then meets the on-load condition, it enters the “Normal Running” status again;

o) When SC power is in the “Normal Running” status and the closing input signal is active, the system automatically synchronizes and closes;

p) It will judge whether the SC power can take over all the DG power when closing in load takeover mode. If not, the controller will initiate an alarm and stop the closing operation. If it meets the requirements, the SC power can take over all the loads; In the fixed power mode, the controller synchronously closes and operates at fixed power and grid connection with DG;

q) If there is trip or shutdown alarm occurs, then the system will trip or stop and the corresponding alarm information will be displayed on the LCD.

Semi-auto Open:

r) In closed status, when the opening input signal is active, the system will detect the current bus is connected with the running DG, and judge whether DG power is able to take over all the SC power,

if not, controller will initiate an alarm and stop the opening operation, if it meets the requirements, SC will perform the soft unload to transfer the loads, then open signal will output;

s) After SC is opened, the SC will enter the "Normal Running" status, then the connection of SC power can be disconnected, and the controller enter the standby status.

9.2 WORKING MODE DESCRIPTION

Table 8 – Working Mode Description

Working Mode	Description	Semi-auto Mode	Manual Mode
Load Takeover Mode	After SC closing, all loads will be transferred to SC side, DG opens and stops; When SC opening, all loads will be transferred to DG side, SC opens and stops.	√	X
Fixed Power Mode	After SC closing, SC shares with parts of loads, DG shares the rest of power; When SC opening, all load will be transferred to DG side, SC opens and stops.	√	X
Load Sharing Mode	After SC closing, loads will be shared by SC and DG; When SC opening, all loads will be transferred to DG side, SC opens and stops.	√	X

NOTE: When in SC mode, outputs of GOV and AVR should be set as "none" if SC can not achieve speed governing.

SmartGen

10 BTB MODE DESCRIPTION

10.1 BTB SYSTEM MODE

When configuring the single-line diagram (SLD), if “BTB external control” is not selected, it is considered that the BTB is controlled by the HPM6-PPU; If “BTB external control” is selected, the BTB status is inputted by an external signal.

10.1.1 MANUAL MODE

When manual mode signal is active, the system will enter the manual mode. In this mode, HPM6-PPU controller can only monitor data and alarm information.

10.1.2 SEMI-AUTO MODE

When semi-auto mode input signal is active, the system will enter semi-auto mode.

In this mode, the control unit will not initiate any control sequences automatically. It will only initiate sequences if external signal is given and alarm protection function is always active.

The external command signal may be given in two ways:

1. Digital inputs
2. Modbus command

In semi-auto mode, all available BTB control units can control the synchronously closed/unloaded open of BTB controller by external command. The system detects whether the BTB current is normal or not. If short circuit occurs, open operation will be done at once.

If a heavy consumer is requested, the system will calculate the power needed. If the available power is insufficient, the heavy consumer connection will not be allowed.

Semi-auto Close:

a) When the closing input signal is active, if BTB controller detects that either side of the bus has no power, it will immediately close;

b) When the closing input signal is active, if BTB controller detects that both side of the bus has power, the system will automatically synchronize and close;

Semi-auto Open:

a) When the opening input signal is active, if BTB controller detects that its power is lower than the minimum on-load percentage, it will output the opening signal;

b) When the opening input signal is active, if BTB controller detects that its power is greater than or equal to the minimum on-load percentage, it will adjust the load on both bus sides to make its power less than the minimum on-load percentage, then it will output the opening signal;

c) When the opening input signal is active, if BTB controller detects that its power is greater than or equal to the minimum on-load percentage, and the status of both bus sides does not meet the opening condition, including bus without power after opening, insufficient bus power to take over the loads after opening, it will not perform the opening action.

11 PROTECTION

Generator protection, bus protection, shore power protection, transformer protection, current protection, power protection and switch protection can be provided by HPM6-PPU. Each kind of protection can configure alarm types and ranges.

Table 9 – Controller Alarm Types

Alarm Type/Action	Buzzer	Display	Start	Close	Unload	Trip	Stop
Block	√	√	X	X	X	X	X
Warning	√	√	√	√	X	X	X
Safety Trip	√	√	√	X	√	√	√
Safety Trip and Stop	√	√	X	X	√	√	X
Trip	√	√	√	X	X	√	X
Trip and Stop	√	√	X	X	X	√	√
Indication	X	√	√	√	X	X	X

Table 10 – Alarm Active Ranges

Active Range	Description
Always Active	All statuses detect alarm.
Inactive	Alarm is inactive.
Before Gen Close	It detects alarm when genset is not closed.
After Gen Close	It detects alarm after genset is closed with load.
Gen Close on Bus	It detects alarm when genset closes with load (bus is available).
No Gen Close on Bus	It detects alarm when genset not close with load (bus is unavailable).
Gen Normal	It detects alarm when generator is normal.
Other Gens Close	It detects alarm after other gensets except for bus close with load.
Start Delay	It detects alarm after genset start delay time.
After Gen Close Delay	It detects alarm after gen close delay.
Before Gen Close Delay	It detects alarm after gen open delay.
Gen Load Normal	It detects alarm after genset takes load and soft loading.
Gen Close Delay on Bus	It detects alarm after genset closes delay with load on bus (bus is available).
No Gen Close Delay on Bus	It detects alarm after no gen close delay with load (bus is unavailable).
Gen Normal Delay	It detects alarm after gen normal delay.
Other Gens Close Delay	It detects alarm after other gensets except for bus close delay with load.
Gen Load Normal Delay	It detects alarm after genset takes load ad soft loading delay.
Bus Available Delay	It detects alarm after the bus available delay.

If alarm self-locked function is enabled, when the alarm condition is not satisfied and acknowledged, this alarm can be removed after unlocking. If this function is disabled, alarm information will be automatically removed after alarm condition is not satisfied and acknowledged.

If alarm automatic acknowledging function is disabled, when the alarm condition is not satisfied, this alarm can be removed after acknowledging. If this function is enabled, alarm information will be automatically removed after alarm condition is not satisfied.

Users can remove the alarm by “Alarm Reset” auxiliary input port.

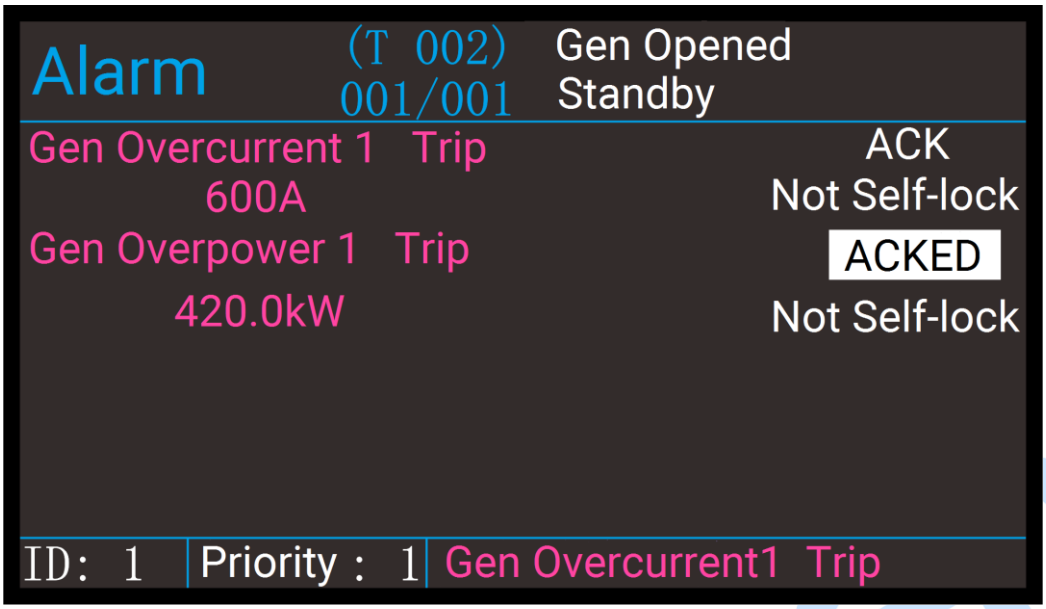

Fig.4 – Alarm Display Diagram

Press ▲▼ to select the alarm you are going to reply, and press Enter to acknowledge the alarm.

Table 11 – HPM6-PPU Alarms List

No.	Types	Description	Alarm Type
Bus Protection			
1	Overvolt 1	When bus voltage has exceeded the set value 1, it will initiate a warning alarm.	**Warn** Always active
2	Overvolt 2	When bus voltage has exceeded the set value 2, it will initiate a trip alarm.	**Trip** Always active
3	Overvolt 3	When bus voltage has exceeded the set value 3, it will initiate an alarm.	Disabled
4	Undervolt 1	When bus voltage has fallen below than the set value 1, it will initiate a warning alarm.	**Warn** It is active after gen has closed on bus.
5	Undervolt 2	When bus voltage has fallen below than the set value 2, it will initiate a trip alarm.	**Trip** It is active after gen has closed on bus.
6	Undervolt 3	When bus voltage has fallen below than the set value 3, it will initiate an alarm.	Disabled
7	Overfreq 1	When bus frequency has exceeded the set value 1, it will initiate a warning alarm.	**Warn** Always active
8	Overfreq 2	When bus frequency has exceeded the set value 2,	**Trip**

No.	Types	Description	Alarm Type
		it will initiate a trip alarm.	Always active
9	Overfreq 3	When bus frequency has exceeded the set value 3, it will initiate an alarm.	Disabled
10	Underfreq 1	When bus frequency has fallen below than the set value 1, it will initiate a warning alarm.	**Warn** It is active after gen has closed on bus.
11	Underfreq 2	When bus frequency has fallen below than the set value 2, it will initiate a trip alarm.	**Trip** It is active gen has closed on bus.
12	Underfreq 3	When bus frequency has fallen below than the set value 3, it will initiate an alarm.	Disabled
13	ROCOF	Alarm when rate of change of frequency is greater than the set value.	Disabled
14	Vector Shift	Alarm when the change of phase angle is greater than the set value.	Disabled
15	Loss of Phase	Alarm when bus losses of phase.	**Warn** It is active after gen is normal.
16	Reverse Phase Sequence	Alarm when bus has reverse phase sequence.	**Warn** It is active after gen is normal.
17	Input Fault	Alarm when other gensets on bus close and controller detects that there is no voltage sampling signal when it is about to close.	**Block** It is active after synchronous close.
Generator Protection			
1	Overvolt 1	When genset voltage has exceeded the set value 1, it will initiate a warning alarm.	**Warn** Always active
2	Overvolt 2	When genset voltage has exceeded the set value 2, it will initiate a trip alarm.	**Trip** Always active
3	Overvolt 3	When genset voltage has exceeded the set value 3, it will initiate an alarm.	Disabled
4	Undervolt 1	When genset voltage has fallen below than the set value 1, it will initiate a warning alarm.	**Warn** It is active after gen has closed.
5	Undervolt 2	When genset voltage has fallen below than the set value 2, it will initiate a trip alarm.	**Trip** It is active after gen has closed.
6	Undervolt 3	When genset voltage has fallen below than the set value 3, it will initiate an alarm.	Disabled
7	Overfreq 1	When genset frequency has exceeded the set value 1, it will initiate a warning alarm.	**Warn** Always active
8	Overfreq 2	When genset frequency has exceeded the set value 2, it will initiate a trip alarm.	**Trip** Always active

No.	Types	Description	Alarm Type
9	Overfreq 3	When genset frequency has exceeded the set value 3, it will initiate an alarm.	Disabled
10	Underfreq 1	When genset frequency has fallen below than the set value 1, it will initiate a warning alarm.	**Warn** It is active after gen has closed.
11	Underfreq 2	When genset frequency has fallen below than the set value 2, it will initiate a trip alarm.	**Trip** It is active after gen has closed.
12	Underfreq 3	When genset frequency has fallen below than the set value 3, it will initiate an alarm.	Disabled
13	Reverse Phase Sequence	When controller detects the reverse phase sequence, it will initiate a warning alarm.	**Warn** It is active after gen is normal.
14	Loss of Phase	When controller detects loss of phase, it will initiate a warning alarm.	**Warn** It is active after gen is normal.
15	Generator ROCOF 1	Alarm when rate of change of frequency is greater than set value.	Disabled
16	Generator ROCOF 2		Disabled
17	Vector Shift 1	Alarm when vector shift is greater than set value.	Disabled
18	Vector Shift 2		Disabled
19	Unbalanced Voltage 1	Alarm when unbalanced voltage is greater than set value. Unbalanced voltage refers to the difference value between maximum voltage and average voltage.	**Warn** It is active after gen has closed.
20	Unbalanced Voltage 2		Disabled
21	Voltage THD 1	Alarm when controller detects voltage total harmonic distortion value is greater than set value.	Disabled
22	Voltage THD 2		Disabled
23	Voltage SHD 1	Alarm when controller detects voltage single harmonic distortion value is greater than set value.	Disabled
24	Voltage SHD 2		Disabled
25	Loss of Excitation 1	Alarm when controller detects the absolute value of genset negative reactive power is greater than the set value.	**Warn** Always active
26	Loss of Excitation 2		Disabled
27	Low Power Factor 1	Alarm when controller detects genset power factor is lower than set vale.	**Warn** It is active after gen has closed.
28	Low Power Factor 2		Disabled
29	Freq./Volt Fault	Frequency/voltage alarm will be initiated when controller starts and can't meet load conditions	**Block** It is active after starting.

No.	Types	Description	Alarm Type
		after load stable delay.	
Shore Power Protection			
1	Overvolt 1	When the voltage of shore power has exceeded the set value 1, it will initiate a warning alarm.	**Warn** Always active
2	Overvolt 2	When the voltage of shore power has exceeded the set value 2, it will initiate a trip alarm.	**Trip** Always active
3	Overvolt 3	When the voltage of shore power has exceeded the set value 3, it will initiate an alarm.	Disabled
4	Undervolt 1	When the voltage of shore power has fallen below than the set value 1, it will initiate a warning alarm.	**Warn** It is active after shore power has closed.
5	Undervolt 2	When the voltage of shore power has fallen below than the set value 2, it will initiate a trip alarm.	**Trip** It is active after shore power has closed.
6	Undervolt 3	When the voltage of shore power has fallen below than the set value 3, it will initiate an alarm.	Disabled
7	Overfreq 1	When the frequency of shore power has exceeded the set value 1, it will initiate a warning alarm.	**Warn** Always active
8	Overfreq 2	When the frequency of shore power has exceeded the set value 2, it will initiate a trip alarm.	**Trip** Always active
9	Overfreq 3	When the frequency of shore power has exceeded the set value 3, it will initiate an alarm.	Disabled
10	Underfreq 1	When the frequency of shore power has fallen below than the set value 1, it will initiate a warning alarm.	**Warn** It is active after shore power has closed.
11	Underfreq 2	When the frequency of shore power has fallen below than the set value 2, it will initiate a trip alarm.	**Trip** It is active after shore power has closed.
12	Underfreq 3	When the frequency of shore power has fallen below than the set value 3, it will initiate an alarm.	Disabled
13	Overcurrent 1	When the current of shore power has exceeded the set value 1, it will initiate a warning alarm.	**Warn** Always active
14	Overcurrent 2	When the current of shore power has exceeded the set value 2, it will initiate a trip alarm.	**Trip** Always active
15	Overcurrent 3	When the current of shore power has exceeded the set value 3, it will initiate a trip alarm.	**Trip** Always active
16	Overcurrent 4	When the current of shore power has exceeded the set value 4, it will initiate a trip alarm.	**Trip** Always active
17	Overcurrent 5	When the current of shore power has exceeded the set value 5, it will initiate an alarm.	Disabled
18	Overcurrent 6	When the current of shore power has exceeded the set value 6, it will initiate an alarm.	Disabled

SmartGen

No.	Types	Description	Alarm Type
19	Shore Power ROCOF 1	Alarm when rate of change of frequency is greater than set value.	Disabled
20	Shore Power ROCOF 2		Disabled
21	Insufficient Capacity	When the capacity of shore power is not enough to take over the total load, it will output the insufficient capacity signal and initiate a warning alarm.	**Warn** It is active after shore power has closed.
22	Paralleled Gensets Over Limit	When the number of gensets in parallel with shore power has exceeded the limit, it will output the paralleled gensets over limit signal and initiate a warning alarm.	**Warn** Always active
23	Paralleled Gensets Timeout	If the connection timeout occurs when the shore power is in parallel with the gensets, it will output the paralleled gensets timeout signal and initiate a warning alarm.	**Warn** Always active
Transformer Protection			
1	Overvolt 1	When the voltage of transformer has exceeded the set value 1, it will initiate a warning alarm.	**Warn** Always active
2	Overvolt 2	When the voltage of transformer has exceeded the set value 2, it will initiate a trip alarm.	**Trip** Always active
3	Overvolt 3	When the voltage of transformer has exceeded the set value 3, it will initiate an alarm.	Disabled
4	Undervolt 1	When the voltage of transformer has fallen below than the set value 1, it will initiate a warning alarm.	**Warn** It is active after transformer has closed.
5	Undervolt 2	When the voltage of transformer has fallen below than the set value 2, it will initiate a trip alarm.	**Trip** It is active after transformer has closed.
6	Undervolt 3	When the voltage of transformer has fallen below than the set value 3, it will initiate an alarm.	Disabled
7	Overfreq 1	When the frequency of transformer has exceeded the set value 1, it will initiate a warning alarm.	**Warn** Always active
8	Overfreq 2	When the frequency of transformer has exceeded the set value 2, it will initiate a trip alarm.	**Trip** Always active
9	Overfreq 3	When the frequency of transformer has exceeded the set value 3, it will initiate an alarm.	Disabled
10	Underfreq 1	When the frequency of transformer has fallen below than the set value 1, it will initiate a warning alarm.	**Warn** It is active after transformer has closed.
11	Underfreq 2	When the frequency of transformer has fallen below than the set value 2, it will initiate a trip alarm.	**Trip** It is active after transformer has closed.

No.	Types	Description	Alarm Type
12	Underfreq 3	When the frequency of transformer has fallen below than the set value 3, it will initiate an alarm.	Disabled
13	Overcurrent 1	When the current of transformer has exceeded the set value 1, it will initiate a warning alarm.	**Warn** Always active
14	Overcurrent 2	When the current of transformer has exceeded the set value 2, it will initiate a trip alarm.	**Trip** Always active
15	Overcurrent 3	When the current of transformer has exceeded the set value 3, it will initiate a trip alarm.	**Trip** Always active
16	Overcurrent 4	When the current of transformer has exceeded the set value 4, it will initiate a trip alarm.	**Trip** Always active
17	Overcurrent 5	When the current of transformer has exceeded the set value 5, it will initiate an alarm.	Disabled
18	Overcurrent 6	When the current of transformer has exceeded the set value 6, it will initiate an alarm.	Disabled
19	Transformer ROCOF 1	Alarm when rate of change of frequency is greater than set value.	Disabled
20	Transformer ROCOF 2		Disabled
21	Insufficient Capacity	When the capacity of transformer is not enough to take over the total load, it will output the insufficient capacity signal and initiate a warning alarm.	**Warn** It is active after transformer has closed.
22	Paralleled Gensets Over Limit	When the number of gensets in parallel with transformer has exceeded the limit, it will output the paralleled gensets over limit signal and initiate a warning alarm.	**Warn** Always active
23	Paralleled Gensets Timeout	If the connection timeout occurs when the transformer is in parallel with the gensets, it will output the paralleled gensets timeout signal and initiate a warning alarm.	**Warn** Always active
Engine Protection			
1	Start Failure	Alarm when genset not reach load condition after starting and start wait delay is over.	**Block** It is active after starting.
2	Stop Failure	Alarm when it detects generator signal after stop wait delay is over.	**Warn** It is active after stop wait delay.
3	Sync. Failure	When controller not detect synchronous signal during set time, it will initiate a warning alarm.	**Warn** It is active in synchronization.
4	Engine Fault	When controller detects engine fault input is active, it will initiate a warning alarm.	**Block** Always active.
5	No Running Feedback Fault	When running feedback function is enabled, if controller detects that voltage and frequency meet	**Warn** It is active after starting.

No.	Types	Description	Alarm Type
		crank disconnect conditions after starting, but running feedback input is inactive, running feedback fault alarm will be initiated.	
6	External Start	In semi-auto mode, when controller detects generator signal, alarm signal will be initiated; In manual mode, alarm signal will be initiated after external start and close with load.	**Indication** It is active at standby.
7	External Stop	In manual mode, controller will send alarm signal in external stop.	**Indication** It is active at stop.
8	Freq. Error	Alarm signal will be initiated when generator and bus frequency are greater than 8Hz in synchronous close.	**Warn** It is active in synchronous close.
9	Emergency Stop	Controller will send alarm signal when emergency stop input port is active.	**Trip and Stop** Always active.
Current Protection			
1	Over Current 1	When controller detects the generator current has exceeded the set value 1, it will initiate a warning alarm.	**Warn** Always active.
2	Over Current 2	When controller detects the generator current has exceeded the set value 2, it will initiate a trip alarm.	**Trip** Always active.
3	Over Current 3	When controller detects the generator current has exceeded the set value 3, it will initiate a trip alarm.	**Trip** Always active.
4	Over Current 4	When controller detects the generator current has exceeded the set value 4, it will initiate a trip alarm.	**Trip** Always active.
5	Over Current 5	When controller detects the generator current has exceeded the set value 5, it will initiate a trip alarm.	Disabled
6	Over Current 6	When controller detects the generator current has exceeded the set value 6, it will initiate a trip alarm.	Disabled
7	Unbalanced Current 1	When the controller detects that unbalanced current has exceeded the set value, it will initiate a warning alarm. Unbalanced current refers to the difference value between max. current and average current.	**Warn** It is active after gen has closed.
8	Unbalanced Current 2		Disabled
9	Current THD 1	Alarm when controller detects current total harmonic distortion value is greater than set value.	Disabled
10	Current THD 2		Disabled
11	Current SHD 1	Alarm when controller detects current single harmonic distortion value is greater than set value.	Disabled
12	Current SHD 2		Disabled
13	Earth Fault 1	Alarm when controller detects earth current is	Disabled

No.	Types	Description	Alarm Type
14	Earth Fault 2	greater than set value.	Disabled
15	External Overcurrent Short	Alarm when external overcurrent input port is active.	**Trip** Always active.
Power Protection			
1	Reverse Power 1	When controller detects the reverse power value (power is negative) has fallen below than the set value 1, it will initiate a trip alarm.	**Warn** Always active.
2	Reverse Power 2	When controller detects the reverse power value (power is negative) has fallen below than the set value 2, it will initiate a trip alarm.	**Trip** Always active.
3	Over Power 1	When controller detects the power value (power is positive) has exceeded the set value 1, it will initiate a warning alarm.	**Warn** Always active.
4	Over Power 2	When controller detects the power value (power is positive) has exceeded the set value 2, it will initiate a trip alarm.	**Trip** Always active.
5	Non Essential Load 1 Trip	When controller detects the power value (power is positive) has exceeded the *Non Essential Load 1 Trip* set value, it will trip and initiate alarm.	**Warn** (Non Essential Load 1 Trip) It is active after the Non Essential Load switch 1 has closed.
6	Non Essential Load 2 Trip	When controller detects the power value (power is positive) has exceeded the *Non Essential Load 2 Trip* set value, it will trip and initiate alarm.	**Warn** (Non Essential Load 2 Trip) It is active after the Non Essential Load switch 2 has closed.
7	Non Essential Load 3 Trip	When controller detects the power value (power is positive) has exceeded the *Non Essential Load 3 Trip* set value, it will trip and initiate alarm.	**Warn** (Non Essential Load 3 Trip) It is active after the Non Essential Load switch 3 has closed.
8	Gen Insufficient Capacity	When controller detects all normal gensets are on grid and the remaining power cannot request power, it will initiate a warning alarm.	**Warn** Always active.
9	Unbalanced Distribution of Active Power 1	When the controller detects the unbalanced distribution of active power percentage is greater than the set value, the unbalanced active power distribution outputs and alarms.	**Warn** It is active after gen has closed.
10	Unbalanced Distribution of Active Power 2		Disabled
11	Unbalanced Distribution of	When the controller detects the unbalanced distribution of reactive power percentage is	**Warn** It is active after gen has

No.	Types	Description	Alarm Type
	Reactive Power 1	greater than the set value, the unbalanced reactive power distribution outputs and alarms.	closed.
12	Unbalanced Distribution of Reactive Power 2		Disabled
13	SG & DG Parallel No. Out of Limit	When the controller detects that the number of DG on grid exceeds the limit when SG synchronizes, SG & DG parallel number exceeds the limit and alarms.	**Warn** It is active when it is SG mode.
14	SG Insufficient Capacity	When the controller detects that SG capacity is unable to receive the total loads, SG capacity is insufficient to output and an alarm is given.	**Warn** It is active when it is SG mode.
15	DG Insufficient Capacity	When the controller detects that DG capacity is unable to receive the total loads, DG capacity is insufficient to output and an alarm is given.	**Warn** It is active when it is SG mode.
16	SG & DG Grid-connection Timeout	When the controller detects timeout of SG & DG grid-connection, it outputs and alarms.	**Warn** Always active.
17	SG Solenoid Valve Fault	Alarm when controller detects SG solenoid valve has faults.	**Block** It is active when it is SG mode.
18	HC1 Feedback Failure	When heavy consumer is acknowledged, HC feedback running signal is not received in set time, controller will send alarm signal.	**Warn** After heavy consumer is acknowledged.
19	HC2 Feedback Failure		**Warn** After heavy consumer is acknowledged.
20	HC3 Feedback Failure		**Warn** After heavy consumer is acknowledged.
21	HC4 Feedback Failure		**Warn** After heavy consumer is acknowledged.
22	HC1 Request Failure	When heavy request is active, if bus left available power can't meet HC demand, controller will send alarm signal.	**Warn** After heavy consumer is active.
23	HC2 Request Failure		**Warn** After heavy consumer is active.
24	HC3 Request Failure		**Warn** After heavy consumer is active.

No.	Types	Description	Alarm Type
25	HC4 Request Failure		**Warn** After heavy consumer is active.
Switch Protection			
1	Fail to Close	When controller detects that there is no *Close* signal after the Close delay has expired, and no other close signals (current, power), it will initiate a block alarm.	**Block** It is active after gen has closed.
2	Fail to Open	When controller detects that there is no *Open* signal after the Open delay has expired, and no other open signals (current, power), it will initiate a block alarm.	**Block** It is active after gen has opened.
3	Close Fault	When controller detects that there is no *Close* signal after the Close delay has expired, but detects other close signals (current, power), it will initiate a warning alarm.	**Warn** Always active.
4	Open Fault	When controller detects that there is no *Open* signal after the Open delay has expired, but detects other open signals (current, power), it will initiate a warning alarm.	**Warn** Always active.
5	Unload Failure	When controller detects unload failure in set time, it will initiate a warning alarm.	**Warn** It is active in unloading.
6	Bustie Switch 0 Fault	The bustie switch fault signal of ring bus. When controller detects fault signal (signal is inconsistent), it will initiate an alarm.	Disabled
7	Bustie Switch 1 Fault	When controller detects bustie switch fault signal (signal is inconsistent), it will initiate an alarm.	**Warn** Always active.
8	Bustie Switch 2 Fault		Disabled
9	Bustie Switch 3 Fault		Disabled
10	Bustie Switch 4 Fault		Disabled
11	Bustie Switch 5 Fault		Disabled
12	Bustie Series Switch 0 Fault	Series switch refers to middle switch of bus section has two or more isolating switches. When controller detects bustie series switch fault signal (signal is inconsistent), it will initiate an alarm.	Disabled
13	Bustie Series Switch 1 Fault		Disabled
14	Bustie Series Switch 2 Fault		Disabled
15	Bustie Series Switch 3 Fault		Disabled

No.	Types	Description	Alarm Type
16	Bustie Series Switch 4 Fault		Disabled
17	Bustie Series Switch 5 Fault		Disabled
18	Shore Switch 1 Fault	When controller detects shore switch fault signal (signal is inconsistent), it will initiate an alarm.	**Warn** Always active.
19	Shore Switch 2 Fault		Disabled
20	Shore Switch 3 Fault		Disabled
21	Shore Switch 4 Fault		Disabled
22	Shore Switch 5 Fault		Disabled
23	Abnormal Trip of Main Switch	When controller detects the input is active, it will initiate a trip alarm.	**Trip** It is active after gen has closed.
24	External Open of Main Switch	When controller is grid-connected with load in non-manual mode, gen close input port is inactive and power and current are both 0, it will initiate a trip alarm.	**Trip** It is active after gen has closed.
25	Bus Break Fault	When bus break function is enabled, if other controllers on the bus have bus break input, and current bus break input port is inactive, it will initiate a warning alarm.	**Warn** It is active after bus break is enabled.
26	SG Solenoid Valve Fault	When SG mode is enabled and SG solenoid valve closed input is configured, if SG valve close status and controller valve close/open status are inconsistent, it will initiate a warning alarm.	**Warn** It is active after SG mode is enabled and SG solenoid valve close input is configured.
27	Volt Asynchrony	When voltage asynchrony is detected after synchronous close, controller will initiate a trip alarm.	**Trip** It is active after gen has closed.
28	Freq. Asynchrony	When frequency asynchrony is detected after synchronous close, controller will initiate a trip alarm.	**Trip** It is active after gen has closed.
29	Phase Asynchrony	When phase asynchrony is detected after synchronous close, controller will initiate a trip alarm.	**Trip** It is active after gen has closed.
Module Protection			
1	Over Volt 1	When controller detects the power supply voltage has exceeded the set value, it will initiate a warning alarm.	**Warn** Always active.
2	Over Volt 2		Disabled

No.	Types	Description	Alarm Type
3	Under Volt 1	When controller detects the power supply voltage has fallen below the set value, it will initiate a warning alarm.	**Warn** Always active.
4	Under Volt 2		Disabled
5	Input Port 1~20 Alarm	When digital input port action selects "Alarm", controller sends corresponding alarm signal when the alarm is active.	Disabled
6	AI1 Open	When controller detects analog input ports are open, it will initiate an alarm.	**Not Used** Always active.
7	AI2 Open		**Not Used** Always active.
8	AI1 Upper Limit 1 Alarm	When analog input port is configured as temperature sensor, temperature value is higher than the upper limit or below the lower limit, controller will initiate an alarm.	**Not Used** Always active.
9	AI1 Upper Limit 2 Alarm		**Not Used** Always active.
10	AI1 Lower Limit 1 Alarm		**Not Used** Always active.
11	AI1 Lower Limit 2 Alarm		**Not Used** Always active.
12	AI2 Upper Limit 1 Alarm		**Not Used** Always active.
13	AI2 Upper Limit 2 Alarm		**Not Used** Always active.
14	AI2 Lower Limit 1 Alarm		**Not Used** Always active.
15	AI2 Lower Limit 2 Alarm		**Not Used** Always active.
16	AI1 Fault	When analog input fault is detected, controller will initiate an alarm.	Disabled
17	AI2 Fault		Disabled
18	MSC Too Few Sets	When the controller detects fewer modules on the MSC link than the minimum number configured in the unit, it will initiate a warning alarm. There are 2 possible reasons: a) Communication line between the controllers disconnects, which interrupts communication. b) Other parallel gensets controllers have not been powered on.	**Warn** Always active.
19	ID Address Error	When repetitive ID on network bus is detected, controller will initiate a warning alarm.	**Warn** Always active.
20	Switch Error	When switch fault signal is detected, controller will initiate a warning alarm.	**Warn** Always active.
21	IP Address Error	When repetitive IP on network bus is detected, controller will initiate a warning alarm.	**Warn** Always active.
22	SLD Config.	When single line drawing configuration is wrong,	**Warn**

No.	Types	Description	Alarm Type
	Error	controller will initiate a warning alarm.	Always active.
23	Ring Disconnect	When network bus ring is disconnected, controller will initiate a warning alarm.	**Warn** Always active.
24	1#DIN16 Input Port 1-16	When digital input port action selects “Alarm”, controller sends corresponding alarm signal when the alarm is active.	**Not Used** Always active.
25	2#DIN16 Input Port 1-16	When digital input port action selects “Alarm”, controller sends corresponding alarm signal when the alarm is active.	**Not Used** Always active.
26	PLC Function 1-16	When PLC result is function and action selects “Alarm”, controller sends corresponding alarm signal when the condition is active.	**Not Used** Active after PLC configuration.
27	1#DIN16 Comm. Failure	When HPM6-PPU controller detects DIN1 module communication failure, it will initiate an alarm.	Disabled
28	2#DIN16 Comm. Failure	When HPM6-PPU controller detects DIN2 module communication failure, it will initiate an alarm.	Disabled
29	1#DOUT16 Comm. Failure	When HPM6-PPU controller detects DOUT1 module communication failure, it will initiate an alarm.	Disabled
30	2#DOUT16 Comm. Failure	When HPM6-PPU controller detects DOUT2 module communication failure, it will initiate an alarm.	Disabled
31	Local Controller Comm. Failure	When HPM6-PPU controller detects communication failure with local controller, it will initiate an alarm.	Disabled
32	1#HMP300 Comm. Failure	When HPM6-PPU controller detects communication failure with HMP300 module, it will initiate an alarm.	Disabled
33	2#HMP300 Comm. Failure		Disabled

SmartGen

12 HARDWARE STRUCTURE

12.1 STRUCTURE DESCRIPTION

HPM6-PPU is composed of display module HPM6D/HPM6D-PPU-RM and master control module HPM6-PPU. Its terminals are standard configuration. Users only can expand 16-way digital input module, 16-way digital output module via CANBUS port to realize expansion.

Table 12 – HPM6D/HPM6D-PPU-RM Terminals

Slot	Terminal	Remarks
TS #1		Communication port.
TS #2	1-9	RS485 communication, relay output, power port.

Table 13 – HPM6-PPU Terminals

Slot	Terminal	Remarks
TS #1	1-16	Power port; reply output port
TS #2	17-22	CANBUS and RS485 communication port
TS #3	23-30	Analog output port
TS #4	31-45	Triode output port
TS #5	46-50	Analog input port
TS #6	51-59	Digital input port
TS #7	60-71	Digital input port
TS #8	72-75	Bus voltage input
TS #9	76-79	Gen voltage input
TS #10	80-87	Gen current input and earth current input
		Communication port

12.2 HPM6D/HPM6D-PPU-RM MODULE

12.2.1 TERMINAL DESCRIPTION

Fig.5 – HPM6D/HPM6D-PPU-RM Terminal Drawing

12.2.2 TS #1 COMMUNICATION PORT

Table 14 – TS #1 Communication Port

Terminal	Function	Cable Size	Parameter	Remarks
	USB DEVICE		USB communication port	USB-TYPE B port, connect PC software.
	USB HOST		USB port	USB-TYPE B port, connect USB read and write configuration files.
	ETHERNET 1	SF/UTP CAT5e	ETHERNET port 1	RJ45 port, connect master control module, PC software.
	ETHERNET 2	SF/UTP CAT5e	ETHERNET port 2	

12.2.3 TS #2 RS485 COMMUNICATION, RELAY OUTPUT, POWER PORT

Table 15 – TS #2 RS485 Communication, Relay Output, Power Port

Terminal	Function	Cable Size	Description	Remark
1	B(-)	0.5mm^2	RS485 communication port	Default baud rate 9600bps, no parity, 2-bit stop bit; Standard MODBUS protocol.
2	A(+)	0.5mm^2		
3	TR	0.5mm^2	Pin-out terminal of 120Ω terminal matching resistor inside the controller RS485 communication port	TR and A(+) terminal short connected, which means 120Ω resistor inside controller A(+) and B(-) has been connected, there is no need for external 120Ω resistor.
4	DIGI.OUTPUT_NC	1.5mm^2	Digital output port	AC250V/8A, it is recommended to connect DC 30V/8A due to insufficient safety requirements.
5	DIGI.OUTPUT _COM	1.5mm^2		
6	DIGI.OUTPUT _NO	1.5mm^2		
7	B+	2.5mm^2	DC(8~35)V	Controller power input.
8	B-	2.5mm^2		
9	PE	2.5mm^2	Ground connection	

12.3 HPM6-PPU MODULE

12.3.1 TERMINAL DESCRIPTION

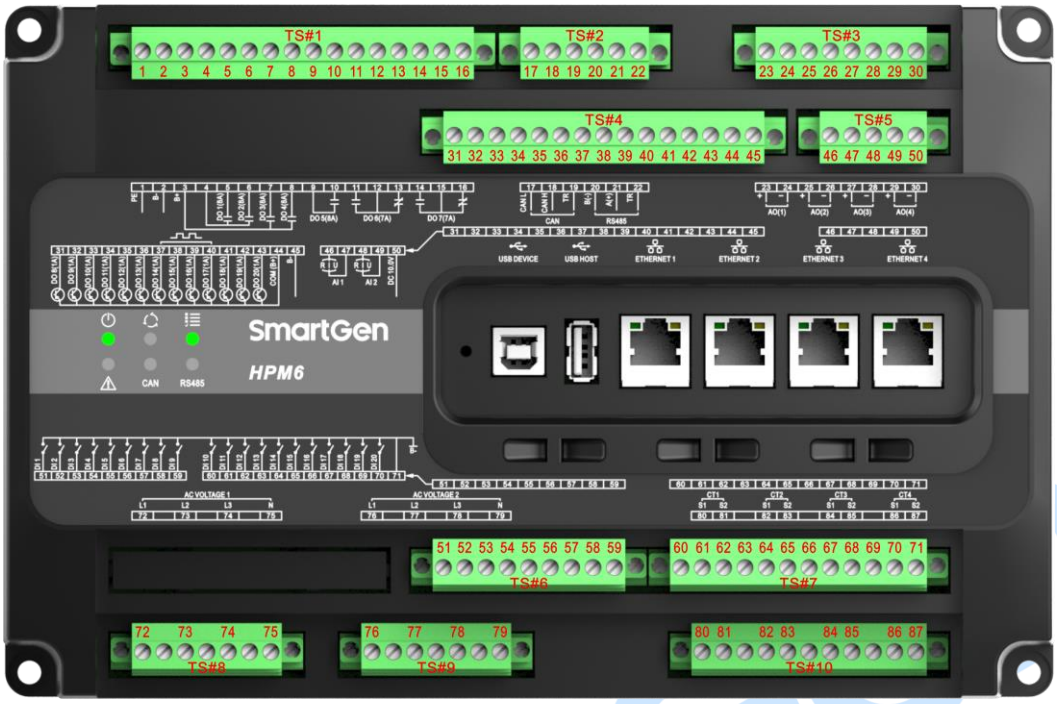

Fig.6 – HPM6 Terminal Drawing

12.3.2 TS #1 POWER AND RELAY OUTPUT PORT

Table 16 – TS #1 Power and Relay Output Port

Terminal	Function	Cable Size	Description	Remark
1	PE	2.5mm^2	Ground connection	
2	B-	2.5mm^2	DC(8~35)V	Controller power input
3	B+	2.5mm^2		
4	COM1	1.5mm^2	port 5~6 COM	
5	DO1	1.5mm^2	Digital output port 1 (engine start)	DC30V/8A
6	DO2	1.5mm^2	Digital output port 2 (engine stop)	DC30V/8A
7	DO3	1.5mm^2	Digital output port 3 (speed raise)	DC30V/8A
8	DO4	1.5mm^2	Digital output port 3 (speed drop)	DC30V/8A
9	DO5	1.5mm^2	Digital output port 5 (audible alarm output)	DC30V/8A
10				
11	DO6_NO	1.5mm^2	Digital output port 6 (close output)	DC30V/7A
12	DO6 _COM	1.5mm^2		
13	DO6 _NC	1.5mm^2		
14	DO7 _NO	1.5mm^2	Digital output port 6 (open output)	DC30V/7A
15	DO7 _COM	1.5mm^2		
16	DO7 _NC	1.5mm^2		

NOTE: If battery is used as power, power must directly connect the battery, but not starting power or charging generator to ensure HPM6 stable supply.

12.3.3 TS #2 CANBUS AND RS485 COMMUNICATION PORT

Table 17 – TS #2 CANBUS and RS485 Communication Port

Terminal	Function	Cable Size	Description	Remark
17	CANL	0.5mm^2	CANBUS communication port	Communication port of expansion module; It is used for expanding digital input module, digital output module or power acquisition module.
18	CANH	0.5mm^2		
19	TR	0.5mm^2	Pin-out terminal of 120Ω terminal matching resistor inside the controller CANBUS communication port	TR and CANH terminal short connected, which means 120Ω resistor inside controller CANH and CANL has been connected, there is no need for external 120Ω resistor.
20	B(-)	0.5mm^2	RS485 communication port	Default baud rate 9600bps, no parity, 2-bit stop bit; Standard MODBUS-RTU protocol.
21	A(+)	0.5mm^2		
22	TR	0.5mm^2	Pin-out terminal of 120Ω terminal matching resistor inside the controller RS485 communication port	TR and A(+) terminal short connected, which means 120Ω resistor inside controller A(+) and B(-) has been connected, there is no need for external 120Ω resistor.

12.3.4 TS #3 ANALOG OUTPUT PORT

Table 18 – TS #3 Analog Output Port

Terminal	Function		Cable Size	Description	Remark
23	+	AOUT1 (GOV)	1.0mm^2	Output -20mA~20mA	Can be configured as GOV, AVR, transmitter output.
24	-				
25	+	AOUT2 (AVR)	1.0mm^2		
26	-				
27	+	AOUT3	1.0mm^2		
28	-				
29	+	AOUT4	1.0mm^2		
30	-				

12.3.5 TS #4 TRIODE OUTPUT PORT

Table 19 – TS #4 Triode Output Port

Terminal	Function	Cable Size	Description	Remark
31	DO8	1.0mm^2	Digital output port 8	Digital output ports 8-20 are triode outputs, which require terminal 44 to connect B+ voltage, then output from terminal 31 to 43. The rated on-load current is 1A.
32	DO9	1.0mm^2	Digital output port 9	
33	DO10	1.0mm^2	Digital output port 10	
34	DO11	1.0mm^2	Digital output port 11	
35	DO12	1.0mm^2	Digital output port 12	
36	DO13	1.0mm^2	Digital output port 13	
37	DO14	1.0mm^2	Digital output port 14	
38	DO15	1.0mm^2	Digital output port 15	
39	DO16	1.0mm^2	Digital output port 16	
40	DO17	1.0mm^2	Digital output port 17	
41	DO18	1.0mm^2	Digital output port 18	
42	DO19	1.0mm^2	Digital output port 19	
43	DO20	1.0mm^2	Digital output port 20	
44	COM(B+)	2.5mm^2	Digital output port 8-20 COM	Connect B+
45	B-	1.5mm^2	B-	Connect B-

12.3.6 TS #5 ANALOG INPUT PORT

Table 20 – TS #5 Analog Input Port

Terminal	Function	Cable Size	Description	Remark
46	AI1	1.0mm^2	AI1 can configure input as resistance type ((0-1000)Ω), current type ((0-20)mA), voltage type ((0-10)V).	Signal + terminal
47	B-	1.0mm^2		Signal - terminal
48	AI2	1.0mm^2	AI2 can configure input as resistance type ((0-1000)Ω), current type ((0-20)mA), voltage type ((0-10)V).	Signal + terminal
49	B-	1.0mm^2		Signal - terminal
50	DC10.0V	1.0mm^2	Provides 10V power for voltage type input of AI1/AI2.	Max output current 30mA

12.3.7 TS #6, TS #7 DIGITAL INPUT PORT

Table 21 – TS #6, TS #7 Digital Input Port

Terminal	Function	Cable Size	Description	Remark
51	DI1	1.0mm^2	Digital Input 1 (close feedback input)	Terminal 71 (B-) connected active.
52	DI2	1.0mm^2	Digital Input 2 (manual mode input)	
53	DI3	1.0mm^2	Digital Input 3 (auto mode input)	
54	DI4	1.0mm^2	Digital Input 4 (semi-auto mode input)	
55	DI5	1.0mm^2	Digital Input 5 (HC inquiry 1)	
56	DI6	1.0mm^2	Digital Input 6 (HC feedback 1)	
57	DI7	1.0mm^2	Digital Input 7	
58	DI8	1.0mm^2	Digital Input 8	
59	DI9	1.0mm^2	Digital Input 9	
60	DI10	1.0mm^2	Digital Input 10	
61	DI11	1.0mm^2	Digital Input 11	
62	DI12	1.0mm^2	Digital Input 12	
63	DI13	1.0mm^2	Digital Input 13	
64	DI14	1.0mm^2	Digital Input 14	
65	DI15	1.0mm^2	Digital Input 15	
66	DI16	1.0mm^2	Digital Input 16	
67	DI17	1.0mm^2	Digital Input 17	
68	DI18	1.0mm^2	Digital Input 18	
69	DI19	1.0mm^2	Digital Input 19	
70	DI20	1.0mm^2	Digital Input 20	
71	B-	1.5mm^2	Digital Input 1-20 COM B-	

SmartGen

12.3.8 TS #8, TS #9, TS #10 GEN/BUS VOLTAGE, GEN/EARTH CURRENT INPUT PORT

Table 22– TS #8, TS #9, TS #10 Gen/Bus Voltage, Gen/Earth Current Input Port

Terminal	Function	Cable Size	Description	Remark
72	L1 (Bus)	1.5mm^2	(Bus) A phase voltage input	
73	L2 (Bus)	1.5mm^2	(Bus) B phase voltage input	
74	L3 (Bus)	1.5mm^2	(Bus) C phase voltage input	
75	N (Bus)	1.5mm^2	(Bus) N phase voltage input	
76	L1 (Gen)	1.5mm^2	(Gen) A phase voltage input	
77	L2 (Gen)	1.5mm^2	(Gen) B phase voltage input	
78	L3 (Gen)	1.5mm^2	(Gen) C phase voltage input	
79	N (Gen)	1.5mm^2	(Gen) N phase voltage input	
80	S1 (CT1)	2.5mm^2	Gen A phase current	Rated input 5A
81	S2 (CT1)	2.5mm^2		
82	S1 (CT2)	2.5mm^2	Gen B phase current	Rated input 5A
83	S2 (CT2)	2.5mm^2		
84	S1 (CT3)	2.5mm^2	Gen C phase current	Rated input 5A
85	S2 (CT3)	2.5mm^2		
86	S1 (CT4)	2.5mm^2	Earth current	Rated input 5A
87	S2 (CT4)	2.5mm^2		

12.3.9 COMMUNICATION PORT

Table 23 – Communication Port

Terminal	Function	Cable Size	Parameter	Remark
	USB DEVICE		USB comm. port	USB-TYPE B port, connect PC software.
	USB HOST		USB port	USB-TYPE A port, connect USB to record historical data.
	ETHERNET 1	SF/UTP CAT5e	ETHERNET port 1	RJ45 port, connect master control module, PC software, display module or other monitoring platforms.
	ETHERNET 2	SF/UTP CAT5e	ETHERNET port 2	
	ETHERNET 3	SF/UTP CAT5e	ETHERNET port 3	
	ETHERNET 4	SF/UTP CAT5e	ETHERNET port 4	

12.4 WIRE CONNECTION

12.4.1 TYPICAL APPLICATION DIAGRAM

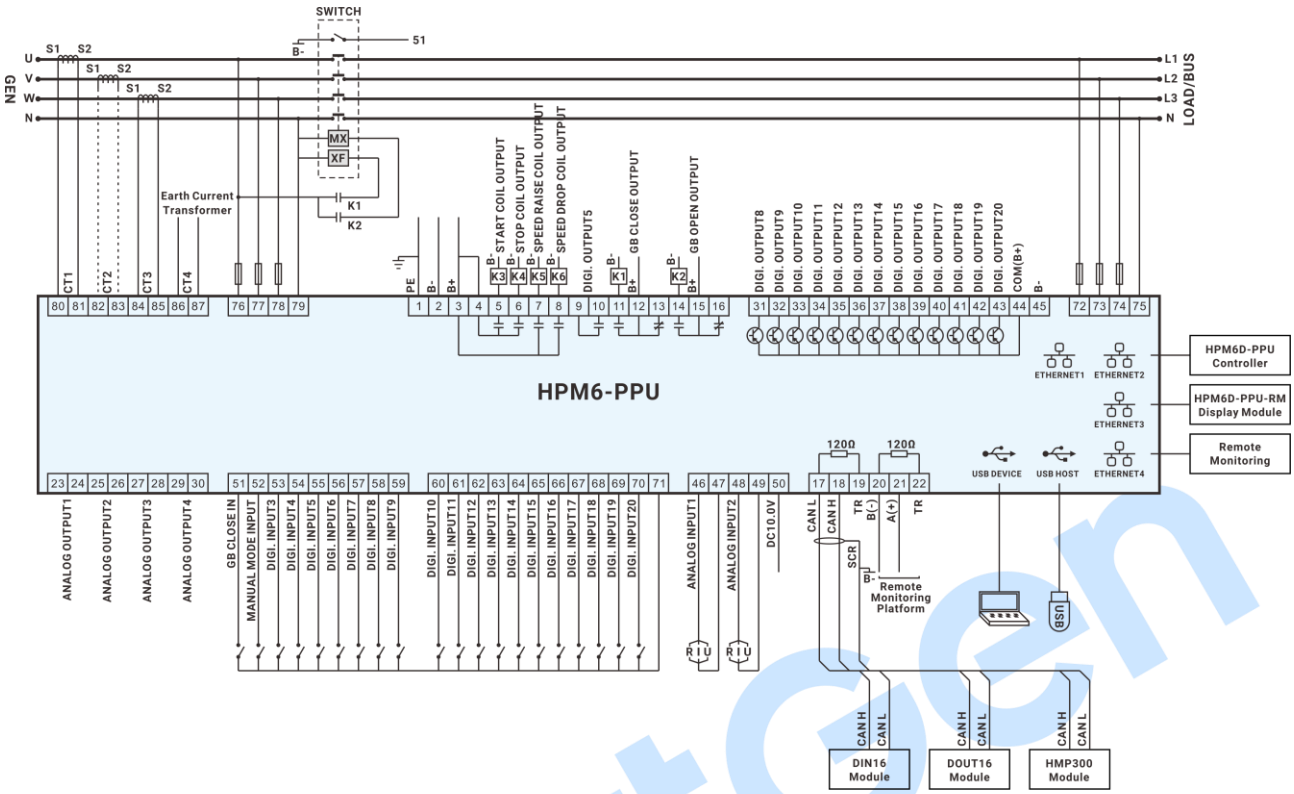

Fig.7 – HPM6-PPU Typical Application Diagram

NOTE: Current transformet CT2 can be disconnected in 3P3W (Enable gen load configuration "three-phase three-wire two-meter method").

12.4.2 AC WIRE CONNECTION (3 PHASE 4 WIRE)

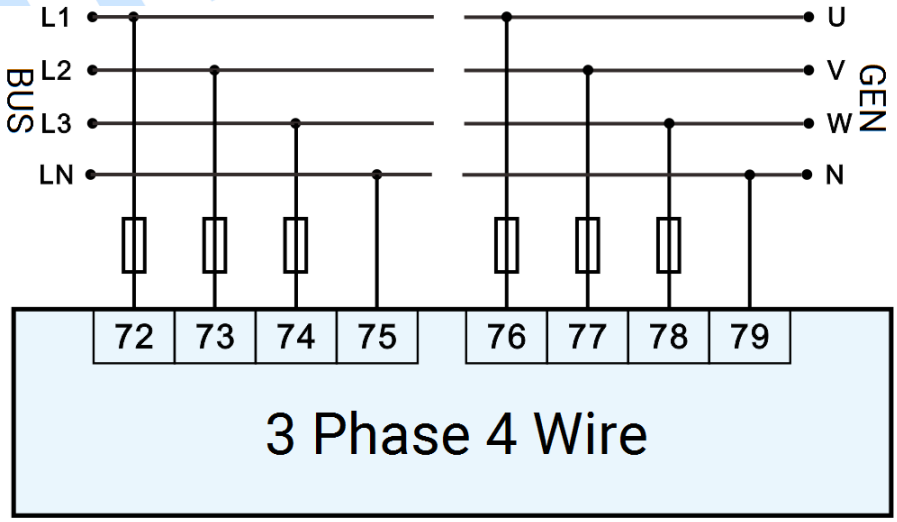

Fig.8 – 3 Phase 4 Wire Connection Diagram

12.4.3 AC WIRE CONNECTION (SINGLE PHASE)

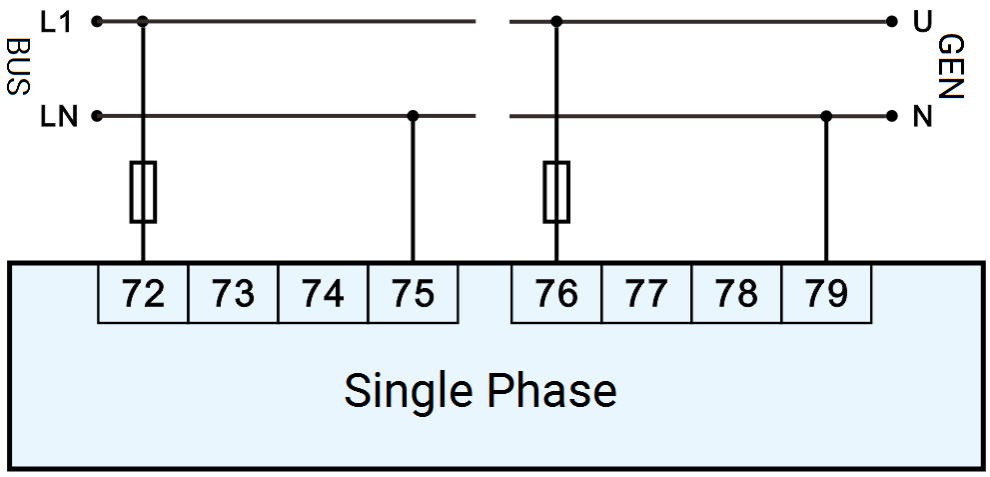

Fig.9 – Single Phase Connection Diagram

12.4.4 AC WIRE CONNECTION (2 PHASE 3 WIRE)

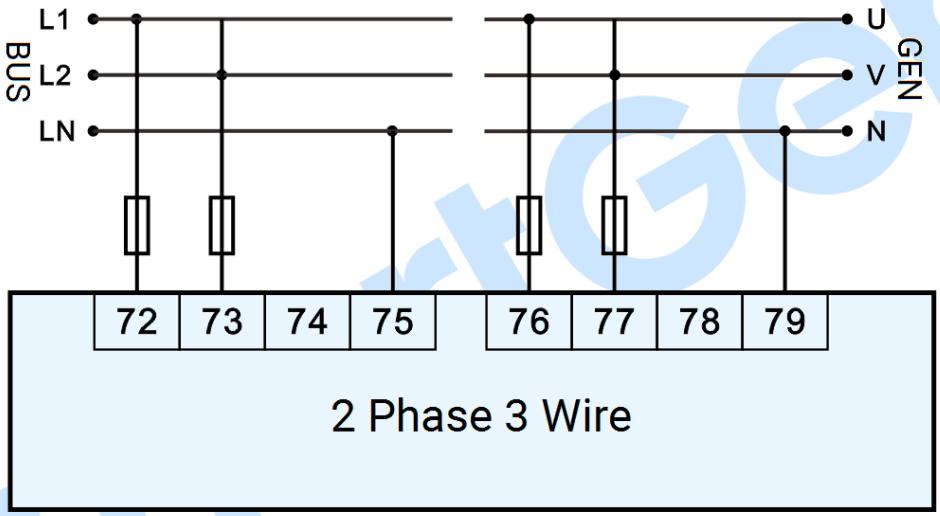

Fig.10 – 2 Phase 3 Wire Connection Diagram

12.4.5 ANALOG INPUT PORT

HPM6-PPU AI1 and AI2 ports support (0~1k)Ω resistance input, (0~20)mA current input and (0~10)V voltage input function. Controller supplies 10V power for voltage input equipment. These two input ports can be connected to signal to adjust frequency and voltage. For example, AI1 is set as voltage type fixed active power input, AI2 is voltage type fixed reactive power input, it is shown as below:

Table 24 – Analog Frequency/Voltage Adjusting Function Description

Function	Description	External Set-point Trigger Bar	Input Voltage
AI1	External frequency adjust	Single unit running or generator breaker is opened.	(0-10)V DC
	External active power adjust	Constant power output is required for HPM6-PPU paralleled with shore power/shaft generator/bus.	(0-10)V DC
AI2	External voltage adjust	Single unit running or generator breaker is opened.	(0-10)V DC
	External reactive power adjust	Constant power output is required for HPM6-PPU paralleled with shore power/shaft generator/bus.	(0-10)V DC

0~10V input wire connection:

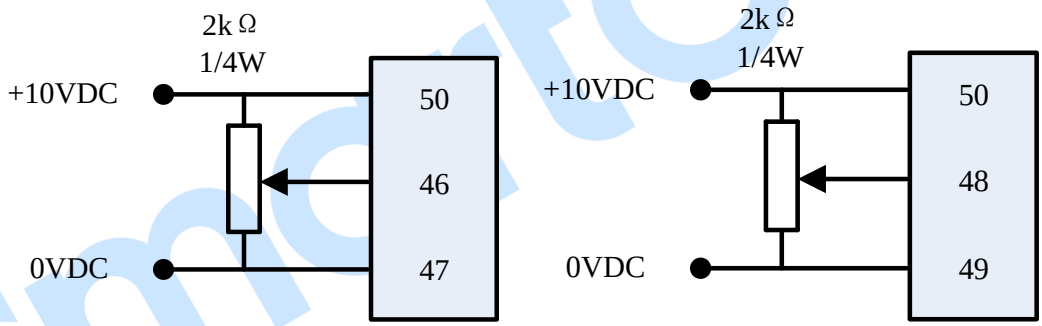

Fig.11 – 0~10V Input Wire Connection Diagram

12.4.6 MSC NETWORK COMMUNICATION PORT

Data sharing and communication of HPM6-PPU all modules are implemented via network port. Detailed connection way is as following:

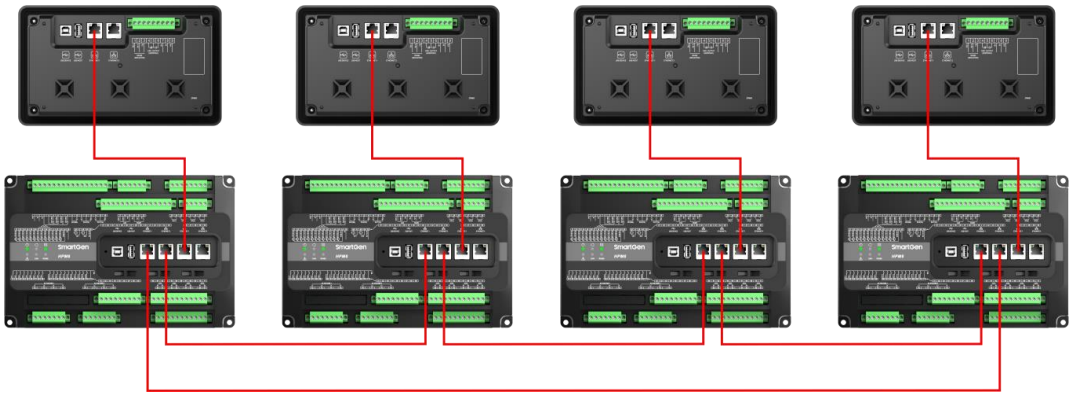

Fig.12 – HPM6-PPU Communication Connection Diagram 1

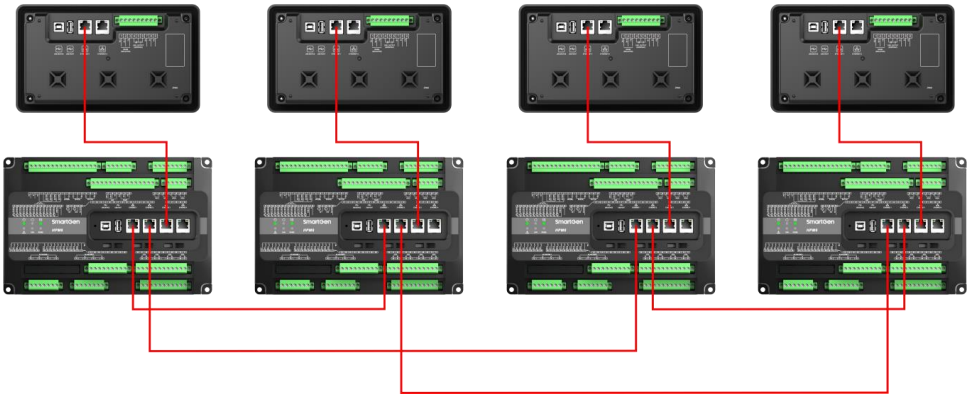

Fig.13 – HPM6-PPU Communication Connection Diagram 2

NOTE: The network bus gives priority to the Network Port 1 and Port 2.

12.4.7 MSC APPLICATION DIAGRAM

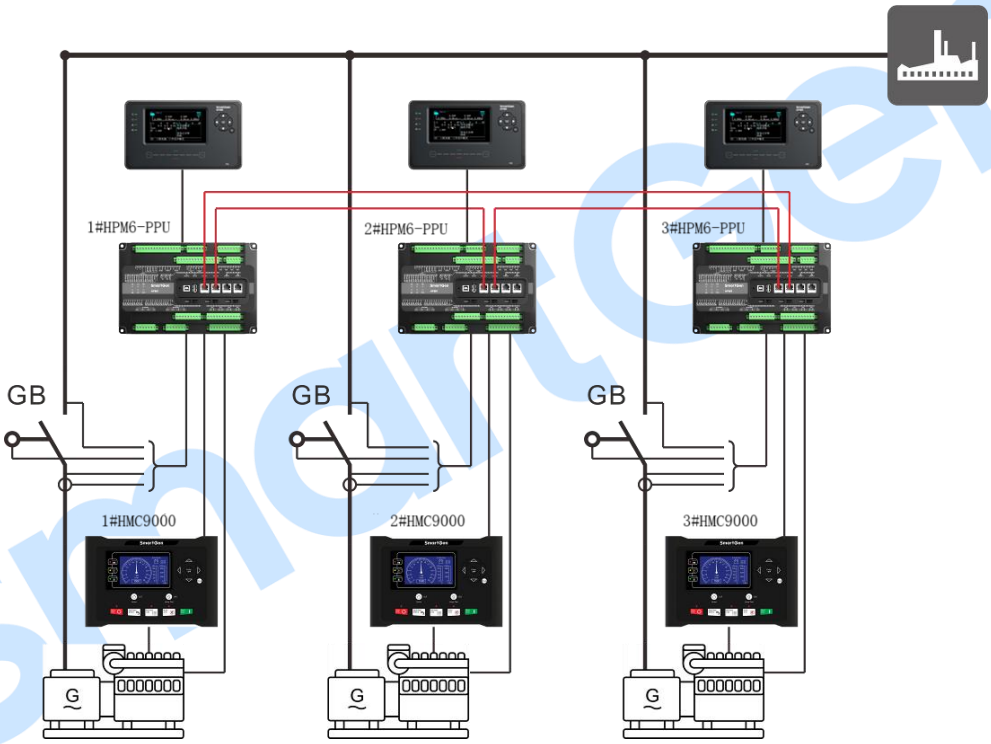

Fig.14 – MSC Application Diagram

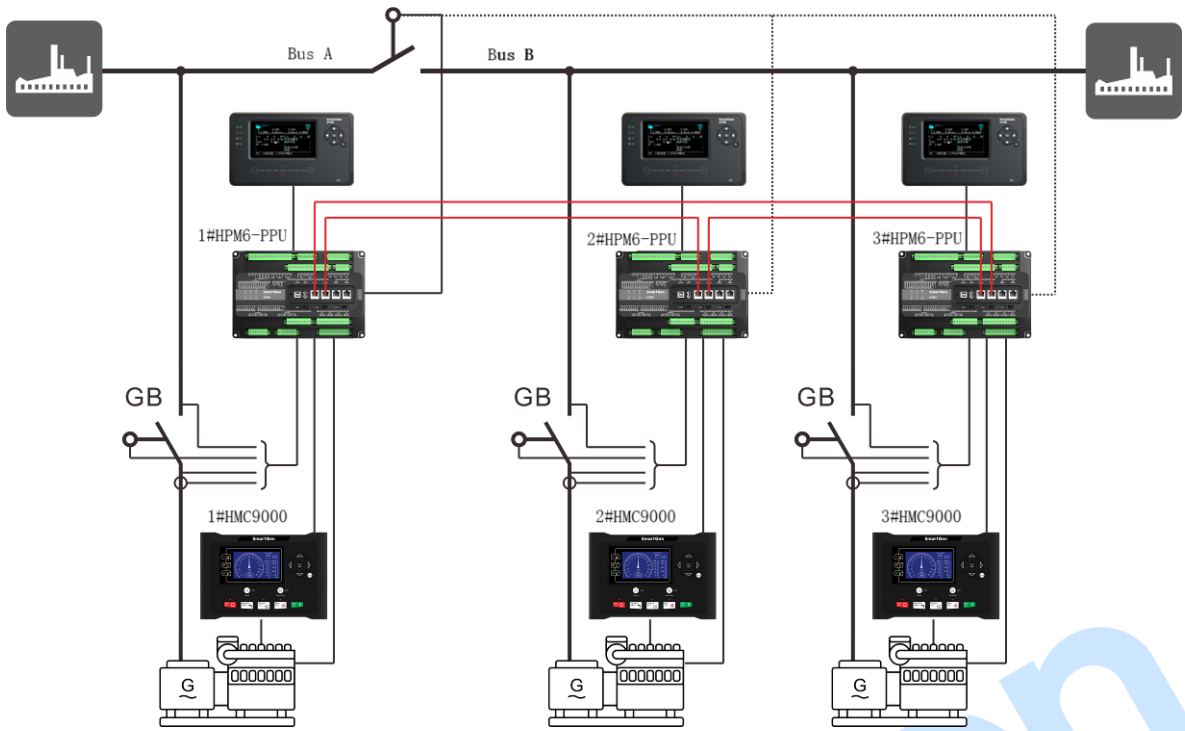

Fig.15 – MSC Application Diagram of Two Buses with Bus Tie Switch

NOTE: Switch feedback signal of bustie switch/disconnector can be connected to any one master control module. It is recommended to connect all master control modules to bustie switch feedback signal.

SmartGen

13 POWER MANAGEMENT AND WORKFLOW CHART

13.1 ILLUSTRATION

There are three kinds of power management mode on the HPM6-PPU: equal load sharing mode, fixed power output mode and load take over mode.

13.2 EQUAL LOAD SHARING MODE

Equal load sharing mode is active in semi-auto mode. Equal load sharing is carried out via network bus.

There are two ways of equal load sharing: active load sharing and reactive load sharing.

a) Active load sharing: the real-time equal load sharing of active power of each unit on bus can be adjusted via GOV or relay output.

b) Reactive load sharing: the real-time equal load sharing of reactive power of each unit on bus can be adjusted via AVR or relay output.

13.3 FIXED POWER OUTPUT MODE

Each unit can be selected as running with fixed power. This can be done via digital input or parameter setting.

The unit works in fixed power mode will automatically be set in SEMI-AUTO. Only one generator per independent bus can run in this mode.

Active power output value and reactive power output value can be set, in addition, power factor also can be set.

When the generator main switch is closed, the generator power will be increased to the fixed power set-point.

The following figure shows the fixed power DG & SG on-load diagram in SG mode:

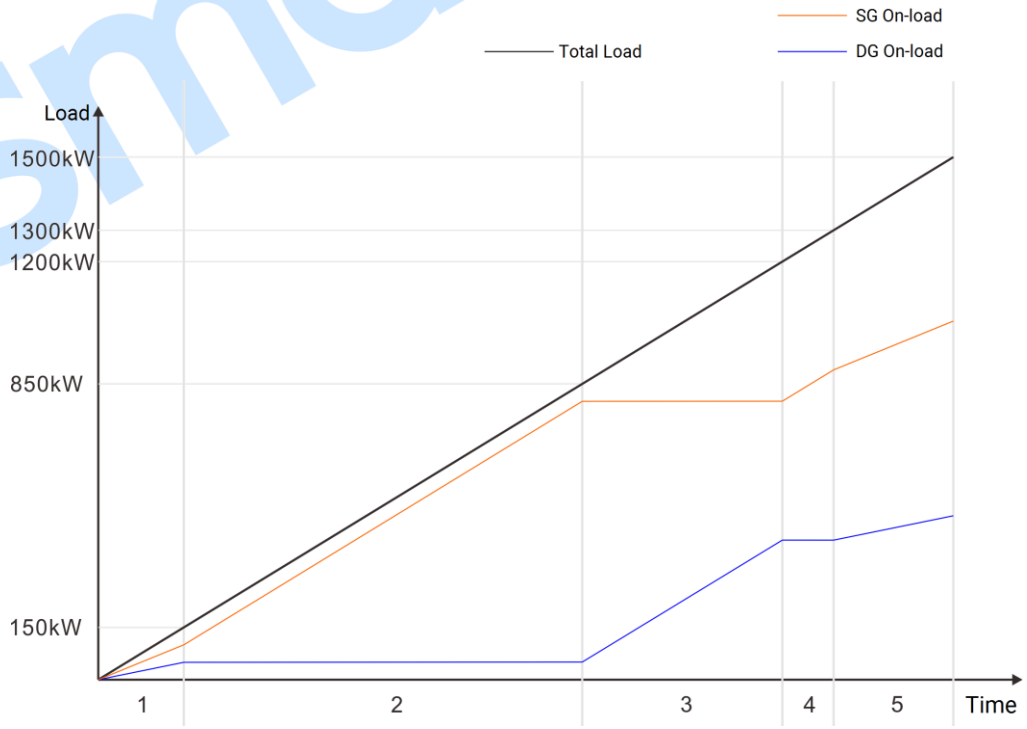

Fig.16 – SG Fixed Power Load Distribution Diagram

Suppose SG rated power is 1000kW, DG rated power is 500kW, the fixed min on-load percentage is 10%, the fixed max on-load percentage is 90% and the fixed output power percentage is 80%. According to the change of the total load, DG and SG on-load are as shown in the 5 parts of figure above:

The first part: (0-150)kW, SG and DG share the power;

The second part: (150-850)kW, DG on-load is 50kW(10%), the rest is loaded with SG;

The third part: (850-1200)kW, SG on-load is 800kW(80%), the rest is loaded with DG;

The fourth part: (1200-1300)kW, DG on-load is 400kW(80%), the rest is loaded with SG;

The fifth part: (1300-1500)kW, SG on-load is 900kW(90%)+sharing excess power (total load-1300kW), DG on-load is 400kW(90%)+sharing excess power (total power-1300kW).

NOTE: If the fixed min on-load percentage is set to 0, DG will start with load only when SG on-load exceeds the fixed power percentage.

13.4 LOAD TAKEOVER MODE

When the shaft generator (SG) or shore power connection system is ready to take over the load, the controller automatically starts to gradually transfer all the current load from the diesel gensets to the SG or shore power. During this process, the controller ensures that the load percentage does not exceed the maximum allowable preset value to avoid overloading.

If the SG or shore power needs to be disconnected, the controller will gradually reduce the load carried by the SG or shore power and increase the output of the diesel gensets simultaneously until all the load is safely transferred to the diesel gensets.

Throughout the load transfer process, the controller ensures the continuity and stability of the power supply by accurately controlling the synchronization between various power sources and load distribution, which will prevent sudden power outage.

13.5 SYNCHRONIZATION

HPM6-PPU controller enables dynamic and static synchronizations. It is defaulted to adopt dynamic synchronization because of its fast speed to close breakers. It is with 0.1Hz slip frequency, synchronization can be finished in 10s and ramp on load immediately once generator closed.

During dynamic synchronization, the unit which is going to be synchronized is running at a different speed to generator on the bus, and the speed difference between them is named as slip frequency. Generally, the synchronizing unit is running at a positive slip frequency which means it is relatively faster than bus generator, so that the generator reverse power is avoided after synchronizing.

The aim of synchronization is reducing the phase angle between two systems (refer to 3-phase systems of generator and bus).

Voltage difference, frequency difference and angle difference should be set during dynamic synchronization. The breaker is going to be closed if all of them meet the requirement between generator and bus.

Static synchronization means that genset ready to synchronize runs in same or extremely similar speed with bus genset, adjusts phase synchronization by phase synchronizer, and sends breaker close signal. It is not recommended to use relay control in static synchronization because it can't precisely adjust due to its slow response. In static synchronization, breaker response time has no higher requirements because of very small or non-existent frequency difference.

13.6 HEAVY CONSUMER INQUIRY

13.6.1 ILLUSTRATION

Each HPM6-PPU controller can handle up to four Heavy Consumers (HC).

Response priority for the same controller is HC1>HC2>HC3>HC4 if HC ID and priority are both set as 128; while for the different controllers, controller's ID determines HC response priority, which means first response to HC request from controller with small ID number.

If HC ID and priority are not 128, HC response depends on ID and priority, which means first response with small priority, first response with small ID number if the priority is same.

If HC ID number is same and not equal to 128, this heavy consumer has redundancy, which means HC signal can be connected to multiple ports. It is active when one HC request feedback is active. When HC power meets the requirement, it outputs HC permission and response signals.

When a heavy consumer is requested to the power station, system will reserve the required power on the bus, until sufficient predicted available power is present at the bus.

13.6.2 HEAVY CONSUMER REQUEST

Heavy load equipment should send a heavy consumer request before starting up. Each HC request signal can set the corresponding inquiry power value and rated power value. HC signal is divided into continuous signal and pulse signal. If bus still has no sufficient left available power for HC response when HC request failure time is over, controller will send HC request failure alarm. If the inquiry signal is pulse signal, this heavy consumer inquiry is over after request failure alarm is acknowledged.

13.6.3 HEAVY CONSUMER RESPONSE

If a heavy consumer is requested, the system calculates the power needed according to the requested value of heavy consumer power. If the request is not satisfied, the controller will start the corresponding standby units, if satisfied and the heavy consumer stability delays, then the response signal will be initiated, heavy consumer response output delay ends, if the heavy consumer feedback inactive system is only heavy consumer includes its rated power, and the controller does not reserve any power after the heavy consumer feedback is active.

Example (three 100kW gensets):

1) There is 60kW redundancy on bus which is composed by two 100kW parallel running gensets with 140kW load, then the heavy consumer request 1 is active (request power is 70kW);
2) An additional genset should be started if the power needed is insufficient;
3) There is 160kW redundancy on bus after genset starting and in parallel, then the response signal will be initiated.

13.6.4 HEAVY CONSUMER PERMISSION

If a heavy consumer is requested, the system calculates the power needed according to the requested value of heavy consumer power. If the request is not satisfied, the controller will start the corresponding standby units, if satisfied and the heavy consumer stability delays, then the heavy consumer permission signal will be initiated and the signal is variable. If the current bus power is not enough, the heavy consumer permission signal will not output.

13.6.5 HEAVY CONSUMER FEEDBACK

The feedback can be divided into digital signal and analog signal according to the type of heavy consumer (fixed power and variable power), analog signal can be collected by analog input or HMP300 communication input. Heavy consumer feedback signal is sent to the controller after the requested heavy consumer starts normally. If it is a fixed power one, the system will not reserve any power for the heavy consumer after the controller receives the digital feedback signal. If it is a variable power one, when the controller receives an analog feedback signal ≥2% of the rated power of heavy consumer, it is considered that the heavy consumer has been started, and the system reserves the remaining power of the rated power of heavy consumer (rated power of heavy consumer - current power of heavy consumer).

After heavy consumer is acknowledged, if HC feedback failure time is over, controller still not receive the HC feedback signal, it will send HC feedback failure alarm

Digital feedback is shown in the figure below:

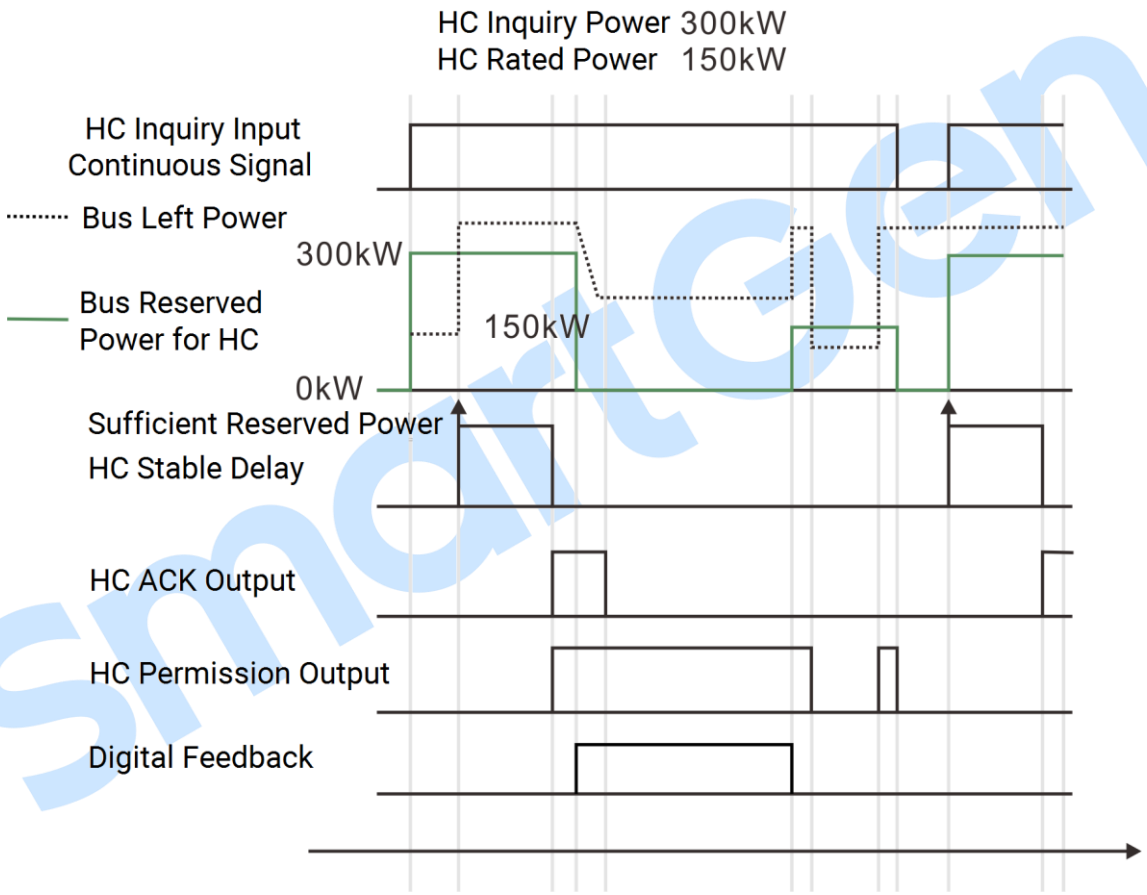

Fig.17 – Fixed Heavy Consumer Sequence Diagram 1

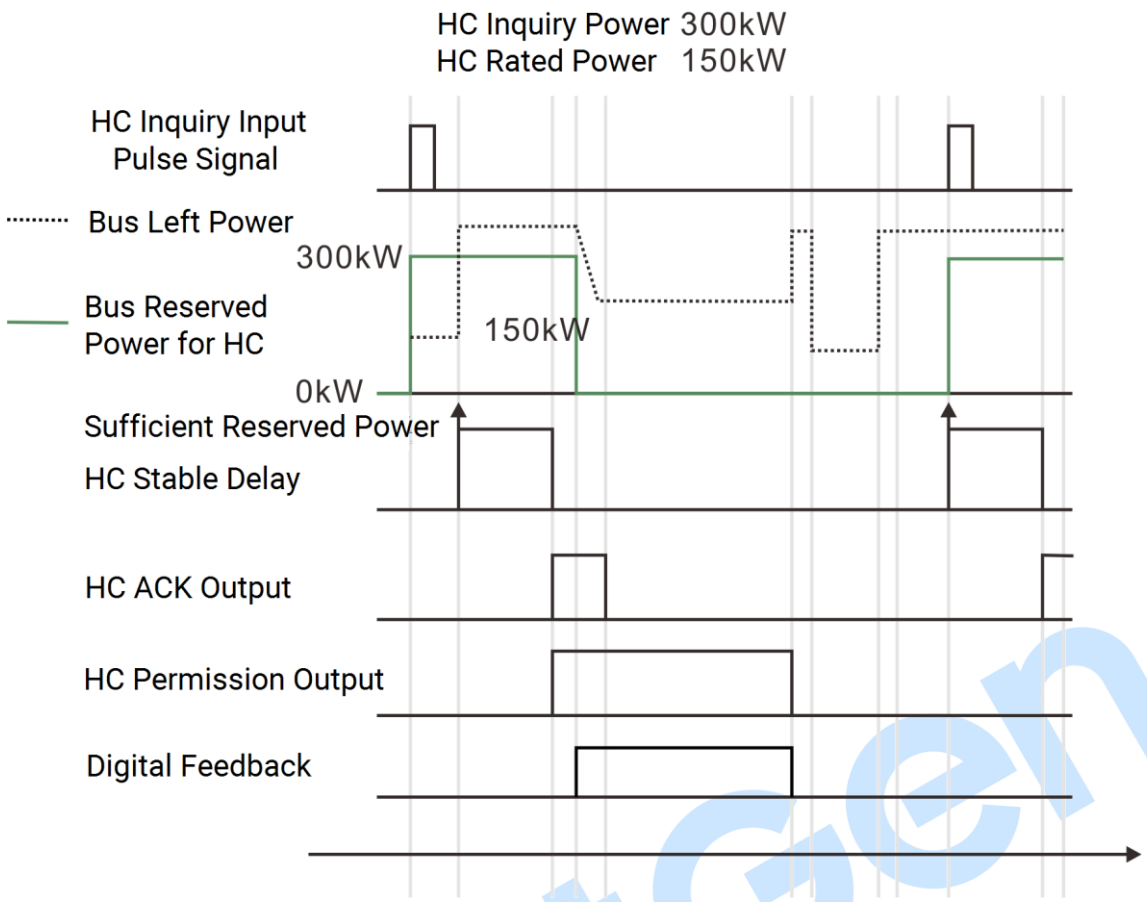

Fig.18 – Fixed Heavy Consumer Sequence Diagram 2

Illustration for the fixed heavy consumer sequence diagram:

a) The HC1 request power is 300kW, HC1 rated power is 150kW;
b) The bus reserves 300kW for HC1;
c) The bus has enough redundant power and starts after heavy consumer stability delay;
d) After the heavy consumer stability delay, the controller starts to output HC response signal;
e) During or after the output delay of heavy consumer response, the bus has different processing states for HC1 heavy consumer according to the different states of heavy consumer feedback and request signals;
f) If the heavy consumer feedback is active, the bus will no longer reserve any power for HC1;
g) If the heavy consumer feedback is inactive, the bus will only reserve the rated power for HC1 when heavy consumer request is active;
h) If the heavy consumer feedback is inactive, the bus will not reserve any power for HC1 when heavy consumer request is inactive.

Analog feedback is shown in the figure below:

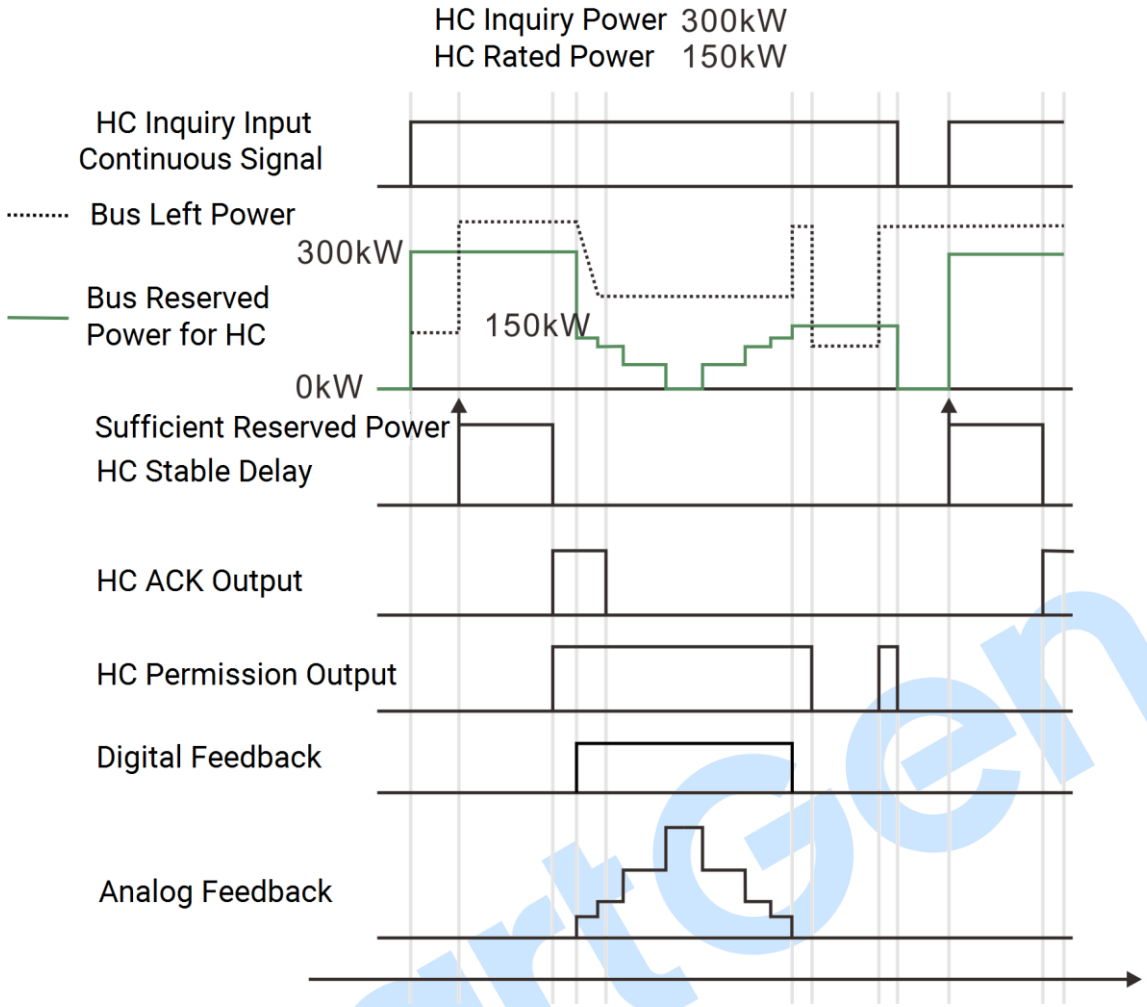

Fig.19 – Analog Heavy Consumer Sequence Diagram 1

SmartGen

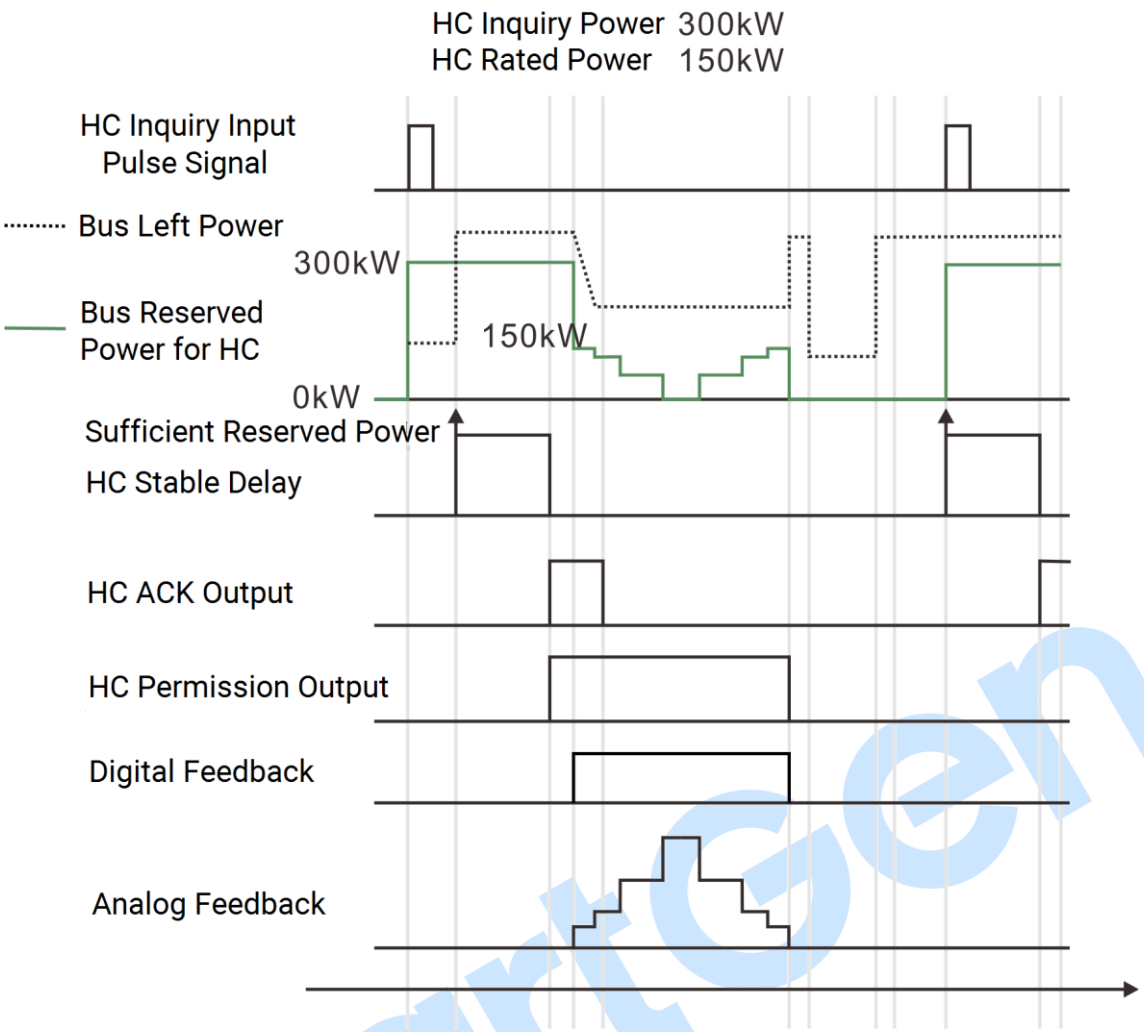

Fig.20 – Analog Heavy Consumer Sequence Diagram 2

13.7 NON ESSENTIAL LOAD (NEL) TRIP

When controller detects generator over power, over current, it can trip some non-essential loads to realize self-protection. There are 3 NELs trip, the priority is NEL1>2>3 (NEL1 trips first). If the active power or current has exceeded the set value, the corresponding NEL will trip after the trip delay, and the warning alarm will be initiated. NEL trip can be reused after alarm response only.

13.8 WORKFLOW CHART

13.8.1 START

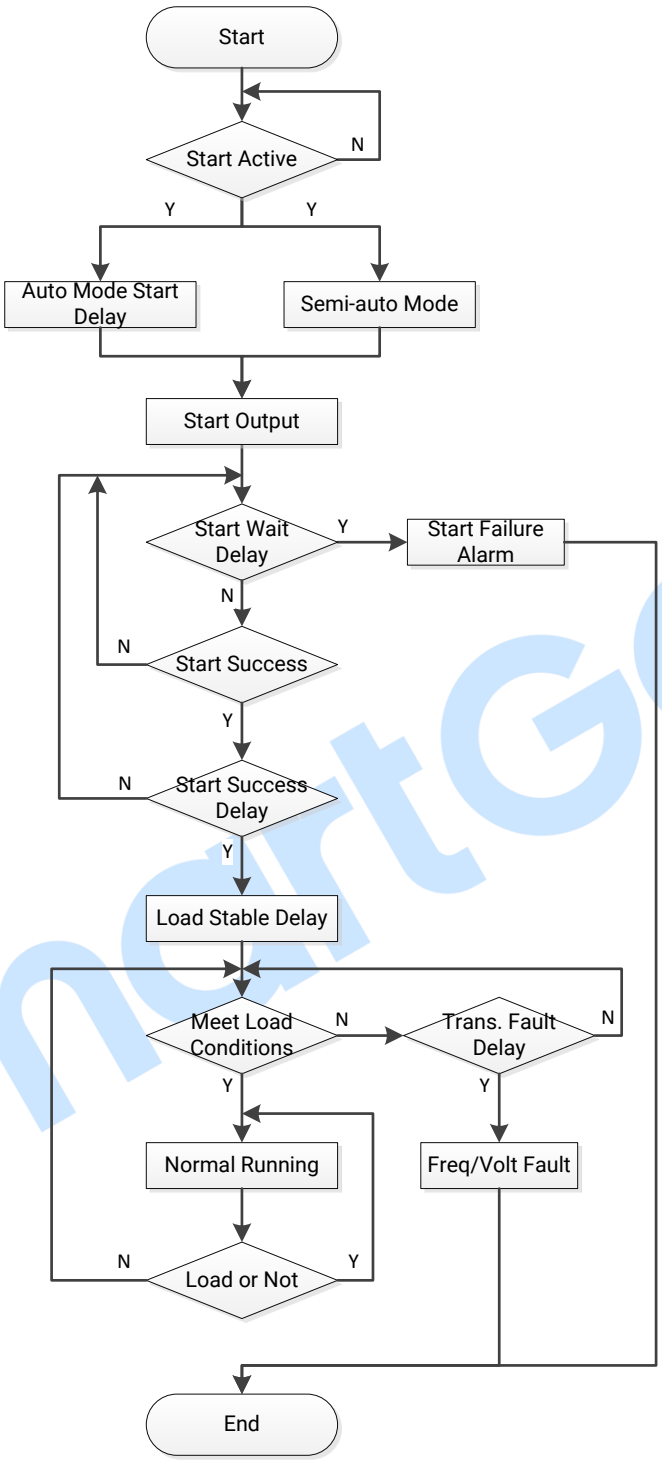

Fig.21 – System Start Workflow Chart

13.8.2 STOP

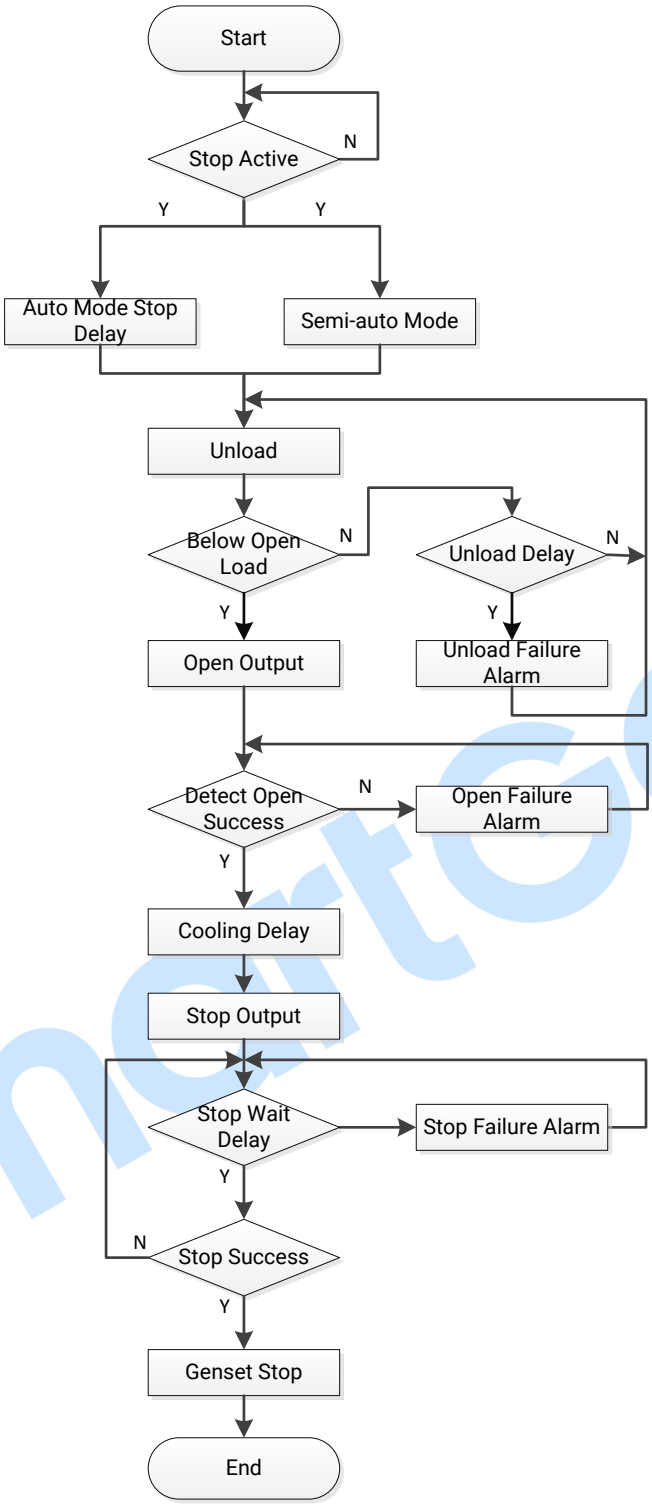

Fig.22 – System Stop Workflow Chart

13.8.3 CLOSE BREAKER

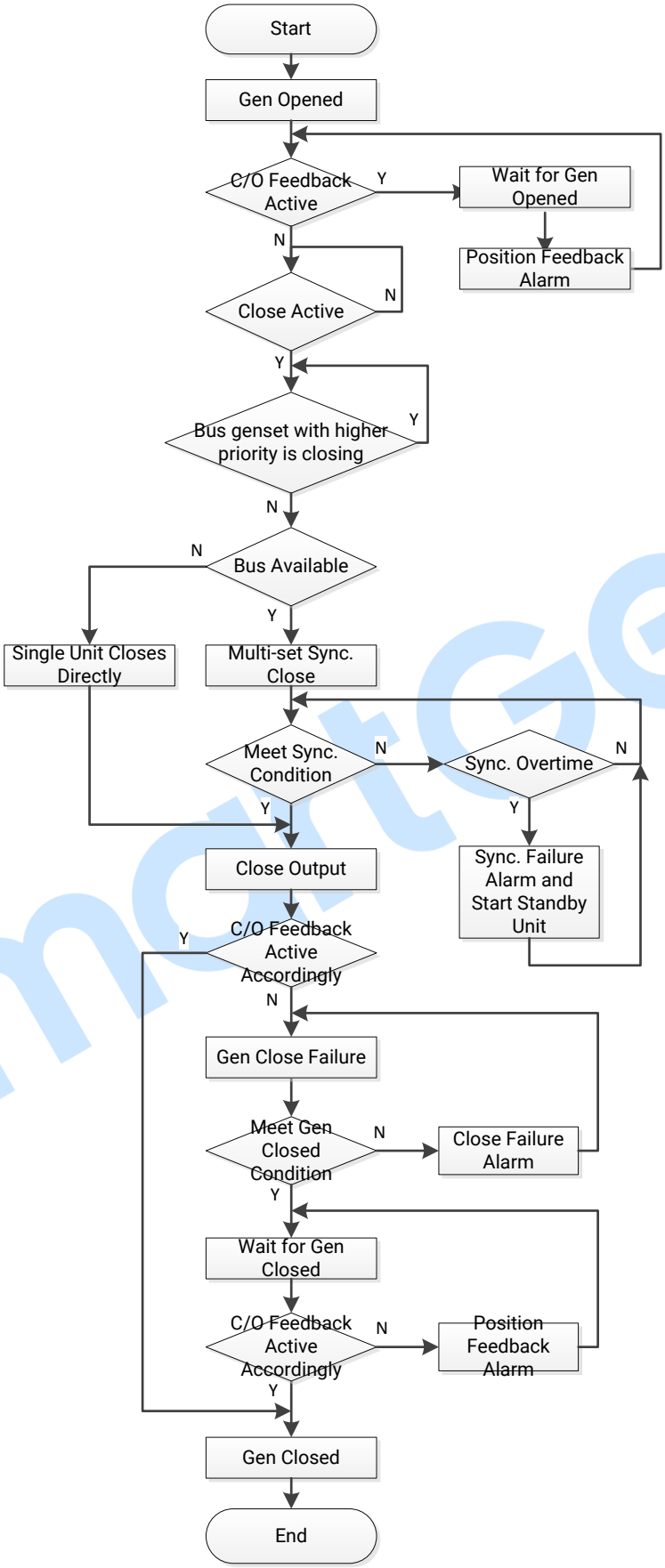

Fig.23 – System Breaker Close Workflow Chart

13.8.4 OPEN BREAKER

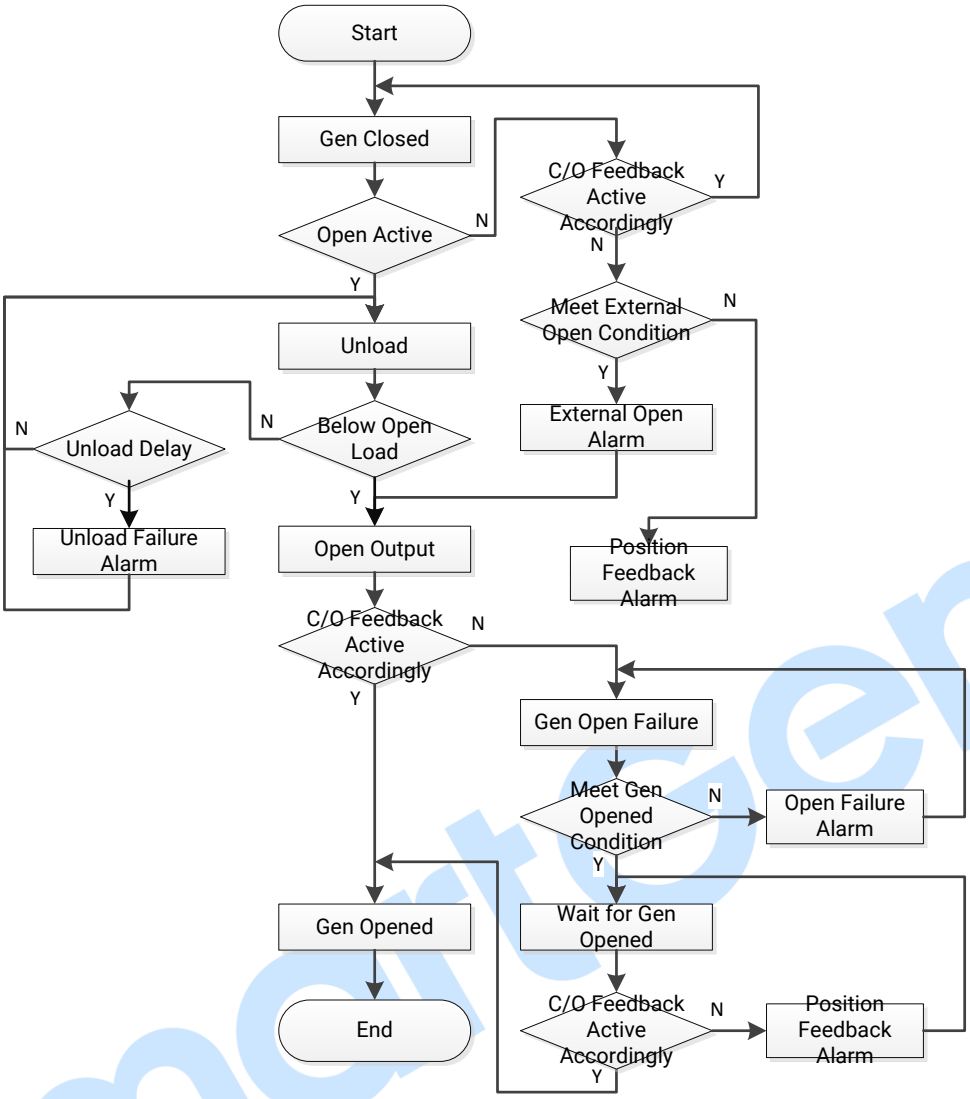

Fig.24 – System Breaker Open Workflow Chart

13.8.5 HEAVY CONSUMER

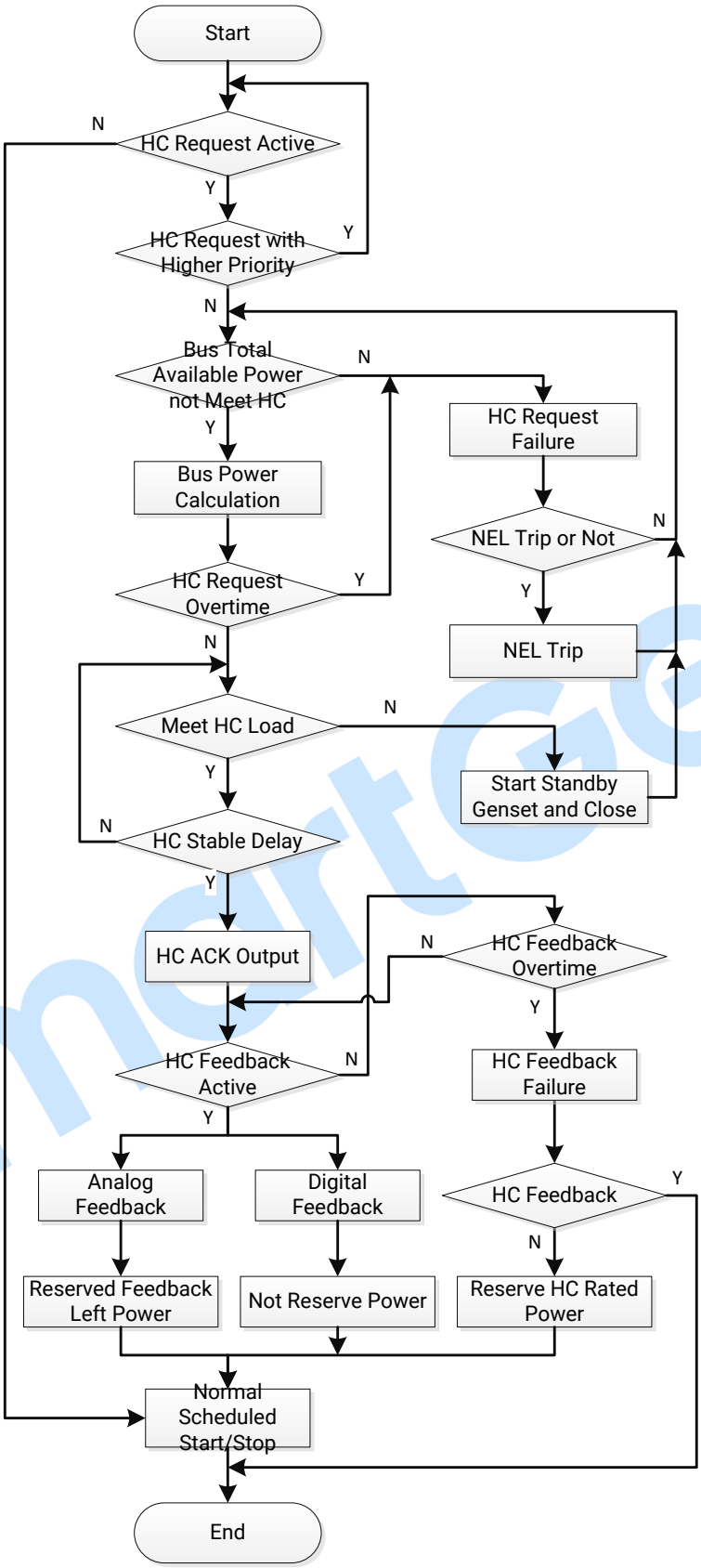

Fig.25 – Heavy Consumer Workflow Chart

14 PARAMETER SETTINGS

14.1 ILLUSTRATION

This part contains all controller parameters, in which partial parameters only can be configured by upper computer.

14.2 MODULE SETTING

Table 25 – Module Parameter Settings

No.	Item	Range	Default	Description
Module Setting				
1	Controller Type	(0-3)	0	0: DG Mode 1: SG Mode 2: SC Mode 3: BTB Mode
2	Power On Mode	(0-2)	0	0: Semi-auto Mode; 1: Reserved; 2: Manual Mode.
3	Language	(0-2)	0	0: Simplified Chinese; 1: English; 2: Others.
4	Password	(0-65535)	00318	It is used for entering parameter setting.
5	Engine Fault Action	(0-6)	0: Block	Alarm action type when engine fault input port is active.
6	SG Mode	(0-2)	0	0: Load Takeover Mode 1: Fixed Power Mode 2: Load Sharing Mode
7	Self-check Abnormal Action	(0-2)	1: Force to Manual Mode	If controller self-check is abnormal, corresponding actions will be initiated. 0: No Action 1: Force to Manual Mode 2: Force to Semi-auto Mode
8	Safe Alarm Action	(0-1)	0: Disable	If it is enabled, in semi-auto mode, safety trip and safety trip and stop alarms will execute corresponding actions. If it is disabled, in semi-auto mode, there are only safety trip and safety trip and stop alarms without action.
9	Safe Mode with Load	(0-1)	1: Enable	Load or not after genset starts in safe mode.
10	Start Enable during Stopping	(0-1)	0	0: Disabled

No.	Item		Range	Default	Description
11	USB Enable		(0-1)	0	0: Disabled
12	USB Data Record Interval		(0.1-3600.0)s	1.0	Interval time of USB data record in genset running.
13	Alarm Data Analysis Record Interval		(0.0-60.0)s	0.1	Interval time of alarm data analysis record.
14	Self-check Abnormal Selection			0x0b1f	Bit0: Controller Power Bit1: Total Modules Few Bit2: MSC Bus Loss Bit3: MSC Bus Abnormal Bit4: Genset Status Bit5: Reserved Bit6: Reserved Bit7: Reserved Bit8: DIN16 Communication Bit9: DOUT16 Communication Bit10: Reserved Bit11: HMP300 Communication Bit12: Reserved Bit13: Reserved Bit14: Reserved Bit15: Reserved
15	RS485 Comm.	Baud Rate	(0-3)	2	0: 2400bps 1: 4800bps 2: 9600bps 3: 19200bps
16		Stop Bit	(0-1)	0	0: 2-bit 1: 1-bit
17		Address	(1-254)	1	Controller communication address for remote monitoring.
18	CAN Comm. Rate		(0-2)	1	0: 500kbps 1: 250kbps 2: 125kbps
19	Power Rated Voltage		(10.0-50.0)V	24.0	Standard value for judging power over voltage and under voltage.
20	Over Volt 1	Action	(0-1)	1: Enable	Set value is the percentage of power rated voltage, return value and delay value can be set.
21		Auto ACK	(0-1)	0: Disable	
22		Alarm Self-lock	(0-1)	0: Disable	
23		Threshold	(0-200.0)%	120.0	
24		Return Value	(0-200.0)%	115.0	
25		Delay Value	(0.1-3600.0)s	60.0	
26		Alarm Type	(0-6)	1: Warning	
27		Active Range	(0-20)	0: Always	

No.	Item		Range	Default	Description
				Active	
28	Over Volt 2	Action	(0-1)	0: Disable	
29		Auto ACK	(0-1)	0: Disable	
30		Alarm Self-lock	(0-1)	0: Disable	
31		Threshold	(0-200.0)%	120.0	
32		Return Value	(0-200.0)%	115.0	
33		Delay Value	(0.1-3600.0)s	60.0	
34		Alarm Type	(0-6)	1: Warning	
35		Active Range	(0-20)	0: Always Active	
36	Under Volt 1	Action	(0-1)	1: Enable	
37		Auto ACK	(0-1)	0: Disable	
38		Alarm Self-lock	(0-1)	0: Disable	
39		Threshold	(0-200.0)%	85.0	
40		Return Value	(0-200.0)%	90.0	
41		Delay Value	(0.1-3600.0)s	60.0	
42		Alarm Type	(0-6)	1: Warning	
43		Active Range	(0-20)	0: Always Active	
44	Under Volt 2	Action	(0-1)	0: Disable	
45		Auto ACK	(0-1)	0: Disable	
46		Alarm Self-lock	(0-1)	0: Disable	
47		Threshold	(0-200.0)%	85.0	
48		Return Value	(0-200.0)%	90.0	
49		Delay Value	(0.1-3600.0)s	60.0	
50		Alarm Type	(0-6)	1: Warning	
51		Active Range	(0-20)	0: Always	
52	1#DIN 16	Action	(0-1)	0: Disable	When HPM6 input ports are insufficient, expand external input module 1 is used, if still not enough, input module 2 is used.
53		Auto ACK	(0-1)	0: Disable	
54		Alarm Self-lock	(0-1)	0: Disable	
55		Delay Value	(0.1-3600.0)s	5.0	
56		Alarm Type	(0-6)	1: Warning	
57	2#DIN 16	Action	(0-1)	0: Disable	
58		Auto ACK	(0-1)	0: Disable	
59		Alarm Self-lock	(0-1)	0: Disable	
60		Delay Value	(0.1-3600.0)s	5.0	
61		Alarm Type	(0-6)	1: Warning	

SmartGen

No.	Item		Range	Default	Description
62	1#DO UT16	Action	(0-1)	0: Disable	When HPM6 output ports are insufficient, expand external output module 1 is used, if still not enough, output module 2 is used.
63		Auto ACK	(0-1)	0: Disable	
64		Alarm Self-lock	(0-1)	0: Disable	
65		Delay Value	(0.1-3600.0)s	5.0	
66		Alarm Type	(0-6)	1: Warning	
67	2#DO UT16	Action	(0-1)	0: Disable	
68		Auto ACK	(0-1)	0: Disable	
69		Alarm Self-lock	(0-1)	0: Disable	
70		Delay Value	(0.1-3600.0)s	5.0	
71		Alarm Type	(0-6)	1: Warning	
72	1#HMP300	Action	(0-1)	0: Disable	When HMP300 is selected to get power signal by HPM6 HC feedback type, HMP300 can be enabled.
73		Auto ACK	(0-1)	0: Disable	
74		Alarm Self-lock	(0-1)	0: Disable	
75		Delay Value	(0.1-3600.0)s	5.0	
76		Alarm Type	(0-6)	1: Warning	
77	2#HMP300	Action	(0-1)	0: Disable	
78		Auto ACK	(0-1)	0: Disable	
79		Alarm Self-lock	(0-1)	0: Disable	
80		Delay Value	(0.1-3600.0)s	5.0	
81		Alarm Type	(0-6)	1: Warning	
82	Network Enable		(0-1)	1: Enable	
83	IP Address		(0-255)	192.168.0.144	
84	Subnet Mask		(0-255)	255.255.255.0	
85	Default Gateway		(0-255)	192.168.0.1	
86	DNS Address		(0-255)	192.168.0.1	
87	MAC Address		(0-255)		MAC of each controller is different.
88	Ring Disc. Alarm	Action	(0-1)	1: Enable	It is enabled when ring has redundancy.
89		Auto ACK	(0-1)	0: Disable	
90		Alarm Self-lock	(0-1)	0: Disable	

14.3 BUS SETTING

Table 26 – Bus Parameter Settings

No.	Items		Range	Default	Description
Bus Setting					
1	Rated Voltage		(30-30000)V	400	Standard for checking bus over/under voltage. (It is primary voltage when using voltage transformer; it is line voltage when AC system is 3P3W while it is phase voltage when using other AC system).
2	Rated Frequency		(10.0-75.0)Hz	50.0	Standard for checking bus over/under frequency.
3	Volt. Trans.(PT)	Action	(0-1) 0: Disable 1: Enable	0: Disable	Users can set the primary voltage and secondary voltage of the voltage transformer.
4		PT Primary	(30-30000)V	100	
5		PT Secondary	(30-1000)V	100	
6	ROCOF	Action	(0-1)	0: Disable	When controller detects bus frequency change rate is greater than set value, it will initiate alarm signal and alarm information will be displayed on LCD.
7		Auto ACK	(0-1)	0: Disable	
8		Alarm Self-lock	(0-1)	0: Disable	
9		Threshold	(0-10.00)Hz/s	0.20	
10		Return Value	(0-10.00)Hz/s	0.15	
11		Delay Value	(0.1-3600.00) s	0.1	
12		Alarm Type	(0-6)	1: Warning	
13		Active Range	(0-20)	6: Gen Normal	
14	Vector Shift	Action	(0-1)	0: Disable	When controller detects bus voltage vector shift value is greater than set value, it will initiate alarm signal and alarm information will be displayed on LCD.
15		Auto ACK	(0-1)	0: Disable	
16		Alarm Self-lock	(0-1)	0: Disable	
17		Threshold	(0-60.0)°	6.0	
18		Return Value	(0-60.0)°	5.0	
19		Delay Value	(0.1-3600.00)s	0.1	
20		Alarm Type	(0-6)	1: Warning	
21		Active Range	(0-20)	6: Gen Normal	
22	Over Voltage 1 Set	Action	(0-1) 0: Disable	1: Enable	Setting value is bus rated voltage's percentage, and both return value and

No.	Items		Range	Default	Description
			1: Enable		delay value can be set.
23		Auto ACK	(0-1) 0: Disable 1: Enable	0: Disable	
24		Alarm Self-lock	(0-1) 0: Disable 1: Enable	0: Disable	
25		Threshold	(0-200.0)%	110.0	
26		Return Value	(0-200.0)%	109.0	
27		Delay Value	(0.1-3600.0)s	5.0	
28		Alarm Type	(0-6) 0: Block 1: Warning 2: Trip 3: Trip and Stop 4: Safety Trip 5: Safety Trip and Stop 6: Indication	1: Warning	
29		Active Range	(0-20) 0: Always Active 1: Inactive 2: Before Gen Close 3: After Gen Close 4: Gen Close on Bus 5: No Gen Close on Bus 6: Gen Normal 7: Other Gens Close 8: Start Delay 9: After Gen Close Delay 10: Before Gen Close Delay 11: Gen Load Normal 12: Gen Close Delay on Bus	0: Always Active	

SmartGen

No.	Items		Range	Default	Description
			13: No Gen Close Delay on Bus 14: Gen Normal Delay 15: Other Gens Close Delay 16: Gen Load Normal Delay 17: Bus Available Delay 18-20: Reserved		
30	Over Voltage 2 Set	Action	(0-1)	1: Enable	
31		Auto ACK	(0-1)	0: Disable	
32		Alarm Self-lock	(0-1)	0: Disable	
33		Threshold	(0-200.0)%	120.0	
34		Return Value	(0-200.0)%	119.0	
35		Delay Value	(0.1-3600.0)s	3.0	
36		Alarm Type	(0-6)	2: Trip	
37		Active Range	(0-20)	0: Always Active	
38	Over Voltage 3 Set	Action	(0-1)	0: Disable	
39		Auto ACK	(0-1)	0: Disable	
40		Alarm Self-lock	(0-1)	0: Disable	
41		Threshold	(0-200.0)%	130.0	
42		Return value	(0-200.0)%	129.0	
43		Delay Value	(0.1-3600.0)s	1.0	
44		Alarm Type	(0-6)	2: Trip	
45		Active Range	(0-20)	0: Always Active	
46	Under Voltage 1 Set	Action	(0-1)	1: Enable	
47		Auto ACK	(0-1)	0: Disable	
48		Alarm Self-lock	(0-1)	0: Disable	
49		Threshold	(0-200.0)%	95.0	
50		Return Value	(0-200.0)%	96.0	
51		Delay Value	(0.1-3600.0)s	5.0	
52		Alarm Type	(0-6)	1: Warning	
53		Active	(0-20)	4: Gen	

SmartGen

No.	Items		Range	Default	Description
		Range		Close on Bus	
54	Under Voltage 2 Set	Action	(0-1)	1: Enable	
55		Auto ACK	(0-1)	0: Disable	
56		Alarm Self-lock	(0-1)	0: Disable	
57		Threshold	(0-200.0)%	80.0	
58		Return Value	(0-200.0)%	81.0	
59		Delay Value	(0.1-3600.0)s	3.0	
60		Alarm Type	(0-6)	2: Trip	
61		Active Range	(0-20)	4: Gen Close on Bus	
62	Under Voltage 3 Set	Action	(0-1)	0: Disable	
63		Auto ACK	(0-1)	0: Disable	
64		Alarm Self-lock	(0-1)	0: Disable	
65		Threshold	(0-200.0)%	70.0	
66		Return Value	(0-200.0)%	71.0	
67		Delay Value	(0.1-3600.0)s	2.0	
68		Alarm Type	(0-6)	2: Trip	
69		Active Range	(0-20)	4: Gen Close on Bus	
70	Over Frequency 1 Set	Action	(0-1)	1: Enable	Setting value is bus rated frequency's percentage, return value and delay value can be set according to actual situations.
71		Auto ACK	(0-1)	0: Disable	
72		Alarm Self-lock	(0-1)	0: Disable	
73		Threshold	(0-200.0)%	105.0	
74		Return Value	(0-200.0)%	104.0	
75		Delay Value	(0.1-3600.0)s	5.0	
76		Alarm Type	(0-6)	1: Warning	
77		Active Range	(0-20)	0: Always Active	
78	Over Frequency 2 Set	Action	(0-1)	1: Enable	
79		Auto ACK	(0-1)	0: Disable	
80		Alarm Self-lock	(0-1)	0: Disable	
81		Threshold	(0-200.0)%	110.0	

SmartGen

No.	Items		Range	Default	Description
82		Return Value	(0-200.0)%	109.0	
83		Delay Value	(0.1-3600.0)s	8.0	
84		Alarm Type	(0-6)	2: Trip	
85		Active Range	(0-20)	0: Always Active	
86	Over Frequency 3 Set	Action	(0-1)	0: Disable	
87		Auto ACK	(0-1)	0: Disable	
88		Alarm Self-lock	(0-1)	0: Disable	
89		Threshold	(0-200.0)%	120.0	
90		Return Value	(0-200.0)%	119.0	
91		Delay Value	(0.1-3600.0)s	6.0	
92		Alarm Type	(0-6)	2: Trip	
93		Active Range	(0-20)	0: Always Active	
94	Under Frequency 1 Set	Action	(0-1)	1: Enable	
95		Auto ACK	(0-1)	0: Disable	
96		Alarm Self-lock	(0-1)	0: Disable	
97		Threshold	(0-200.0)%	96.0	
98		Return Value	(0-200.0)%	97.0	
99		Delay Value	(0.1-3600.0)s	5.0	
100		Alarm Type	(0-6)	1: Warning	
101		Active Range	(0-20)	4: Gen Close on Bus	
102	Under Frequency 2 Set	Action	(0-1)	1: Enable	
103		Auto ACK	(0-1)	0: Disable	
104		Alarm Self-lock	(0-1)	0: Disable	
105		Threshold	(0-200.0)%	93.0	
106		Return Value	(0-200.0)%	94.0	
107		Delay Value	(0.1-3600.0)s	10.0	
108		Alarm Type	(0-6)	2: Trip	
109		Active Range	(0-20)	4: Gen Close on Bus	
110	Under	Action	(0-1)	0: Disable	

SmartGen

No.	Items		Range	Default	Description
111	Frequency 3 Set	Auto ACK	(0-1)	0: Disable	
112		Alarm Self-lock	(0-1)	0: Disable	
113		Threshold	(0-200.0)%	92.0	
114		Set Value	(0-200.0)%	93.0	
115		Delay	(0.1-3600.0)s	8.0	
116		Alarm Type	(0-6)	2: Trip	
117		Active Range	(0-20)	4: Gen Close on Bus	

14.4 GENERATOR SETTING

Table 27 – Generator Parameter Settings

No.	Items	Range	Default	Description
Generator Setting				
1	AC System	(0-3)	0: 3P3W	0: 3 phase, 4 wire (3P4W); 1: 3 phase, 3 wire (3P3W); 2: 2 phase, 3 wire (2P3W); 3: Single phase, 2 wire (1P2W).
2	Rated Voltage	(30-30000)V	400	To offer standards for detecting of generator's over/under voltage. (It is primary voltage when using voltage transformer; it is line voltage when AC system is 3P3W while it is phase voltage when using other AC system).
3	Min. Loading Voltage	(0-200.0)%	95.0	Setting value is percentage of generator rated voltage. Detect when controller prepares loading. When generator voltage is between min loading voltage and max loading voltage, it will enter into normally running.
4	Max. Loading Voltage	(0-200.0)%	105.0	
5	Crank Disconnect Volt	(0-200.0)%	80.0	To offer standards for detecting crank disconnect voltage is satisfied or not.
6	Rated Frequency	(10.0-75.0)Hz	50.0	To offer standards for detecting over/under/load frequency.
7	Min. Loading Frequency	(0-200.0)%	94.0	Setting value is percentage of generator rated frequency. Detect when controller prepares loading. When generator frequency is
8	Max. Loading Frequency	(0-200.0)%	101.0	

No.	Items		Range	Default	Description
					between min loading frequency and max loading frequency, it will enter into normal running.
9	Crank Disconnect Freq		(0-200.0)%	85	To offer standards for detecting crank disconnect frequency is satisfied or not.
10	Phase Sequence Select		(0-1)	0	0: L1-L2-L3 1: L1-L3-L2
11	Harmonic Display		(0-1)	0: Disable	0: Disable; 1: Enable
12	Volt. Trans.(PT)	Action	(0-1) 0: Disable 1: Enable	0: Disable	Primary/secondary voltage of voltage transformer can be set.
13		PT Primary	(30-30000)V	100	
14		PT Secondary	(30-1000)V	100	
15	Loss of Phase Set	Action	(0-1)	1: Enable	
16		Auto ACK	(0-1)	0: Disable	
17		Alarm Self-lock	(0-1)	0: Disable	
18		Delay Value	(0.1-3600.0)s	5.0	
19		Alarm Type	(0-6)	1: Warning	
20		Active Range	(0-20)	6: Gen Normal	
21	Reverse Phase Sequence	Action	(0-1)	1: Enable	
22		Auto ACK	(0-1)	0: Disable	
23		Alarm Self-lock	(0-1)	0: Disable	
24		Delay Value	(0.1-3600.0)s	5.0	
25		Alarm Type	(0-6)	1: Warning	
26		Active Range	(0-20)	6: Gen Normal	
27	VECTOR SHIFT 1	Action	(0-1)	0: Disable	When controller detects gen vector shift is greater than set value, it will initiate alarm signal and alarm information will be displayed on LCD.
28		Auto ACK	(0-1)	0: Disable	
29		Alarm Self-lock	(0-1)	0: Disable	
30		Threshold	(0-60.0)°	6.0	
31		Return Value	(0-60.0)°	5.0	
32		Delay Value	(0.1-3600.0)s	0.1	
33		Alarm Type	(0-6)	1: Warning	
34		Active Range	(0-20)	6: Gen Normal	

No.	Items		Range	Default	Description
35	VECTOR SHIFT 2	Action	(0-1)	0: Disable	
36		Auto ACK	(0-1)	0: Disable	
37		Alarm Self-lock	(0-1)	0: Disable	
38		Threshold	(0-60.0)°	6.0	
39		Return Value	(0-60.0)°	5.0	
40		Delay Value	(0.1-3600.0)s	0.1	
41		Alarm Type	(0-6)	1: Warning	
42		Active Range	(0-20)	6: Gen Normal	
43	Voltage THD 1 Set	Action	(0-1)	0: Disable	When controller detects voltage total harmonic distortion percentage is greater than set value, it will initiate alarm signal and alarm information will be displayed on LCD.
44		Auto ACK	(0-1)	0: Disable	
45		Alarm Self-lock	(0-1)	0: Disable	
46		Threshold	(0-200.0)%	10.0	
47		Return Value	(0-200.0)%	5.0	
48		Delay Value	(0.1-3600.0)s	5.0	
49		Alarm Type	(0-6)	1: Warning	
50		Active Range	(0-20)	6: Gen Normal	
51	Voltage THD 2 Set	Action	(0-1)	0: Disable	
52		Auto ACK	(0-1)	0: Disable	
53		Alarm Self-lock	(0-1)	0: Disable	
54		Threshold	(0-200.0)%	10.0	
55		Return Value	(0-200.0)%	5.0	
56		Delay Value	(0.1-3600.0)s	5.0	
57		Alarm Type	(0-6)	1: Warning	
58		Active Range	(0-20)	6: Gen Normal	
59	Voltage SHD 1 Set	Action	(0-1)	0: Disable	When controller detects voltage any one harmonic distortion percentage is greater than set value, it will initiate alarm signal and alarm information will be displayed on LCD.
60		Auto ACK	(0-1)	0: Disable	
61		Alarm Self-lock	(0-1)	0: Disable	
62		Threshold	(0-200.0)%	10.0	
63		Return Value	(0-200.0)%	5.0	
64		Delay Value	(0.1-3600.0)s	5.0	
65		Alarm Type	(0-6)	1: Warning	

SmartGen

No.	Items		Range	Default	Description
66		Active Range	(0-20)	6: Gen Normal	
67	Voltage SHD 2 Set	Action	(0-1)	0: Disable	
68		Auto ACK	(0-1)	0: Disable	
69		Alarm Self-lock	(0-1)	0: Disable	
70		Threshold	(0-200.0)%	10.0	
71		Return Value	(0-200.0)%	5.0	
72		Delay Value	(0.1-3600.0)s	5.0	
73		Alarm Type	(0-6)	1: Warning	
74		Active Range	(0-20)	6: Gen Normal	
75	Over Voltage 1 Set	Action	(0-1) 0: Disable 1: Enable	1: Enable	Setting value is percentage of generator rated voltage. Delay value and return value can be set.
76		Auto ACK	(0-1) 0: Disable 1: Enable	0: Disable	
77		Alarm Self-lock	(0-1) 0: Disable 1: Enable	0: Disable	
78		Threshold	(0-200.0)%	105.0	
79		Return Value	(0-200.0)%	104.0	
80		Delay Value	(0.1-3600.0)s	5.0	
81		Alarm Type	(0-6) 0: Block 1: Warning 2: Trip 3: Trip and Stop 4: Safety Trip 5: Safety Trip and Stop 6: Indication	1: Warning	
82		Active Range	(0-20) 0: Always Active 1: Inactive 2: Before Gen Close 3: After Gen Close 4: Gen Close on Bus	0: Always Active	

SmartGen

No.	Items		Range	Default	Description
			5: No Gen Close on Bus 6: Gen Normal 7: Other Gens Close 8: Start Delay 9: After Gen Close Delay 10: Before Gen Close Delay 11: Gen Load Normal 12: Gen Close Delay on Bus 13: No Gen Close Delay on Bus 14: Gen Normal Delay 15: Other Gens Close Delay 16: Gen Load Normal Delay 17: Bus Available Delay 18-20: Reserved		
83	Over Voltage 2 Set	Action	(0-1)	1: Enable	
84		Auto ACK	(0-1)	0: Disable	
85		Alarm Self-lock	(0-1)	0: Disable	
86		Threshold	(0-200.0)%	115.0	
87		Return Value	(0-200.0)%	114.0	
88		Delay Value	(0.1-3600.0)s	1.0	
89		Alarm Type	(0-6)	2: Trip	
90		Active Range	(0-20)	0: Always Active	
91	Over Voltage 3 Set	Action	(0-1)	0: Disable	
92		Auto ACK	(0-1)	0: Disable	
93		Alarm Self-lock	(0-1)	0: Disable	
94		Threshold	(0-200.0)%	120.0	
95		Return Value	(0-200.0)%	119.0	

SmartGen

No.	Items		Range	Default	Description
96		Delay Value	(0.1-3600.0)s	1.0	
97		Alarm Type	(0-6)	2: Trip	
98		Active Range	(0-20)	0: Always Active	
99	Under Voltage Set 1	Action	(0-1)	1: Enable	
100		Auto ACK	(0-1)	0: Disable	
101		Alarm Self-lock	(0-1)	0: Disable	
102		Threshold	(0-200.0)%	95.0	
103		Return Value	(0-200.0)%	96.0	
104		Delay Value	(0.1-3600.0)s	5.0	
105		Alarm Type	(0-6)	1: Warning	
106		Active Range	(0-20)	3: After Gen Close	
107	Under Voltage Set 2	Action	(0-1)	1: Enable	
108		Auto ACK	(0-1)	0: Disable	
109		Alarm Self-lock	(0-1)	0: Disable	
110		Threshold	(0-200.0)%	80.0	
111		Set Value	(0-200.0)%	81.0	
112		Delay	(0.1-3600.0)s	3.0	
113		Alarm Type	(0-6)	2: Trip	
114		Active Range	(0-20)	3: After Gen Close	
115	Under Voltage Set 3	Action	(0-1)	0: Disable	
116		Auto ACK	(0-1)	0: Disable	
117		Alarm Self-lock	(0-1)	0: Disable	
118		Threshold	(0-200.0)%	70.0	
119		Set Value	(0-200.0)%	71.0	
120		Delay	(0.1-3600.0)s	1.0	
121		Alarm Type	(0-6)	2: Trip	
122		Active Range	(0-20)	3: After Gen Close	
123	Voltage Imbalance 1 Set	Action	(0-1)	1: Enable	When controller detects voltage imbalance percentage is greater than set value, it will initiate alarm signal and alarm information will be displayed on LCD.
124		Auto ACK	(0-1)	0: Disable	
125		Alarm Self-lock	(0-1)	0: Disable	
126		Threshold	(0-200.0)%	10.0	
127		Set Value	(0-200.0)%	5.0	
128		Delay	(0.1-3600.0)s	5.0	

No.	Items		Range	Default	Description
129		Alarm Type	(0-6)	1: Warning	
130		Active Range	(0-20)	3: After Gen Close	
131	Voltage Imbalance 2 Set	Action	(0-1)	0: Disable	
132		Auto ACK	(0-1)	0: Disable	
133		Alarm Self-lock	(0-1)	0: Disable	
134		Threshold	(0-200.0)%	10.0	
135		Set Value	(0-200.0)%	5.0	
136		Delay	(0.1-3600.0)s	5.0	
137		Alarm Type	(0-6)	1: Warning	
138		Active Range	(0-20)	3: After Gen Close	
139	Over Frequency 1 Set	Action	(0-1)	1: Enable	Setting value is percentage of generator rated frequency. Delay value and return value can be set according to actual situation.
140		Auto ACK	(0-1)	0: Disable	
141		Alarm Self-lock	(0-1)	0: Disable	
142		Threshold	(0-200.0)%	105.0	
143		Return Value	(0-200.0)%	104.0	
144		Delay Value	(0.1-3600.0)s	5.0	
145		Alarm Type	(0-6)	1: Warning	
146		Active Range	(0-20)	0: Always Active	
147	Over Frequency 2 Set	Action	(0-1)	1: Enable	
148		Auto ACK	(0-1)	0: Disable	
149		Alarm Self-lock	(0-1)	0: Disable	
150		Threshold	(0-200.0)%	107.0	
151		Return Value	(0-200.0)%	106.0	
152		Delay Value	(0.1-3600.0)s	3.0	
153		Alarm Type	(0-6)	2: Trip	
154		Active Range	(0-20)	0: Always Active	
155	Over Frequency 3 Set	Action	(0-1)	0: Disable	
156		Auto ACK	(0-1)	0: Disable	
157		Alarm Self-lock	(0-1)	0: Disable	
158		Threshold	(0-200.0)%	110.0	
159		Return Value	(0-200.0)%	109.0	

SmartGen

No.	Items		Range	Default	Description
160		Delay Value	(0.1-3600.0)s	1.0	
161		Alarm Type	(0-6)	2: Trip	
162		Active Range	(0-20)	0: Always Active	
163	Under Frequency 1 Set	Action	(0-1)	1: Enable	
164		Auto ACK	(0-1)	0: Disable	
165		Alarm Self-lock	(0-1)	0: Disable	
166		Threshold	(0-200.0)%	95.0	
167		Return Value	(0-200.0)%	96.0	
168		Delay Value	(0.1-3600.0)s	5.0	
169		Alarm Type	(0-6)	1: Warning	
170		Active Range	(0-20)	3: After Gen Close	
171	Under Frequency 2 Set	Action	(0-1)	1: Enable	
172		Auto ACK	(0-1)	0: Disable	
173		Alarm Self-lock	(0-1)	0: Disable	
174		Threshold	(0-200.0)%	93.0	
175		Return Value	(0-200.0)%	94.0	
176		Delay Value	(0.1-3600.0)s	3.0	
177		Alarm Type	(0-6)	2: Trip	
178		Active Range	(0-20)	3: After Gen Close	
179	Under Frequency 3 Set	Action	(0-1)	0: Disable	
180		Auto ACK	(0-1)	0: Disable	
181		Alarm Self-lock	(0-1)	0: Disable	
182		Threshold	(0-200.0)%	90.0	
183		Return Value	(0-200.0)%	91.0	
184		Delay Value	(0.1-3600.0)s	1.0	
185		Alarm Type	(0-6)	2: Trip	
186		Active Range	(0-20)	3: After Gen Close	
187	ROCOF 1	Action	(0-1)	0: Disable	When controller detects that ROCOF is greater than the set value, it will send alarm signal and the alarm information will be displayed on the LCD.
188		Auto ACK	(0-1)	0: Disable	
189		Alarm Self-lock	(0-1)	0: Disable	
190		Threshold	(0-10.00)Hz/s	0.20	

No.	Items		Range	Default	Description
191		Return Value	(0-10.00)Hz/s	0.19	
192		Delay Value	(0.1-3600.0)s	0.1	
193		Alarm Type	(0-6)	1: Warning	
194		Active Range	(0-20)	6: Gen Normal	
195	ROCOF 2	Action	(0-1)	0: Disable	
196		Auto ACK	(0-1)	0: Disable	
197		Alarm Self-lock	(0-1)	0: Disable	
198		Threshold	(0-10.00)Hz/s	0.20	
199		Return Value	(0-10.00)Hz/s	0.19	
200		Delay Value	(0.1-3600.0)s	0.1	
201		Alarm Type	(0-6)	1: Warning	
202		Active Range	(0-20)	6: Gen Normal	

SmartGen

14.5 GENERATOR LOAD SETTING

Table 28 – Generator Load Settings

No.	Items		Range	Default	Description
Load Setting					
1.	CT Ratio		(5-6000)/5	500/5	The ratio of external CT.
2.	Full Load Rating		(5-6000)A	500	Generator's rated current.
3.	Rated Active Power		(5-20000)kW	276	Generator's rated active power.
4.	Rated Reactive Power		(5-20000)kvar	210	Generator's rated reactive power.
5.	Earth Current Trans. Ratio		(5-6000)/5	500	The ratio of external earth current transformer.
6.	Load Slope		(0.1-100.0)%/s	3.0	Genset load percentage in unit time.
7.	Load Slope Delay Point		(0.1-40.0)%	10.0	Load point for genset loading rest.
8.	Load Slope Delay Value		(0-30)s	0	Load disconnect time for genset loading rest.
9.	Drop Power set		(0-100)%	70	When the input port is active, it is the set value of genset drop power.
10.	Unload Slope		(0.1-100.0)%/s	3.0	Genset unload percentage in unit time.
11.	Unload Slope Delay Point		(0.1-40.0)%	10.0	Unload disconnect point for genset unloading rest.
12.	Unload Slope Delay Value		(0-30)s	0	Unload disconnect time for genset unloading rest.
13.	Load Start Offset Point		(0-100.0)%	5.0	Start offset point of soft loading after closing.
14.	Unload Start Offset Point		(0-100.0)%	5.0	Start offset point of soft unloading before opening.
15.	3P3W Two-meter Method		(0-1)	0	When it is enabled, B phase current is not connected.
16.	Unload Failure Open	Action	(0-1)	1: Enable	Action whether to open when unloading failure.
17.		Threshold	(0-100.0)%	10.0	Open after reaching this value when unloading failure.
18.		Delay	(0-3600)s	180	Judging delay when unloading failure.
19.	Earth Fault 1 Alarm Set	Action	(0-1)	0: Disable	When controller detects earth current is greater than set value, it will issue alarm signal
20.		Auto ACK	(0-1)	0: Disable	
21.		Alarm Self-lock	(0-1)	0: Disable	

No.	Items		Range	Default	Description
22.		Threshold	(0-200.0)%	20.0	and alarm information will be displayed on LCD.
23.		Return Value	(0-200.0)%	19.0	
24.		Delay Value	(0.1-3600.0)s	10.0	
25.		Alarm Type	(0-6)	1: Warning	
26.		Active Range	(0-20)	0: Always Active	
27.	Earth Fault 2 Alarm Set	Action	(0-1)	0: Disable	
28.		Auto ACK	(0-1)	0: Disable	
29.		Alarm Self-lock	(0-1)	0: Disable	
30.		Threshold	(0-200.0)%	20.0	
31.		Return Value	(0-200.0)%	19.0	
32.		Delay Value	(0.1-3600.0)s	10.0	
33.		Alarm Type	(0-6)	1: Warning	
34.		Active Range	(0-20)	0: Always Active	
35.	Current THD 1 Set	Action	(0-1)	0: Disable	When controller detects current total harmonic distortion is greater than set value, it will initiate alarm signal and alarm information will be displayed on LCD.
36.		Auto ACK	(0-1)	0: Disable	
37.		Alarm Self-lock	(0-1)	0: Disable	
38.		Threshold	(0-200.0)%	10.0	
39.		Return Value	(0-200.0)%	5.0	
40.		Delay Value	(0.1-3600.0)s	5.0	
41.		Alarm Type	(0-6)	1: Warning	
42.		Active Range	(0-20)	3: After Gen Close	
43.	Current THD 2 Set	Action	(0-1)	0: Disable	
44.		Auto ACK	(0-1)	0: Disable	
45.		Alarm Self-lock	(0-1)	0: Disable	
46.		Threshold	(0-200.0)%	10.0	
47.		Return Value	(0-200.0)%	5.0	
48.		Delay Value	(0.1-3600.0)s	5.0	
49.		Alarm Type	(0-6)	1: Warning	
50.		Active Range	(0-20)	3: After Gen Close	
51.	Current SHD 1 Set	Action	(0-1)	0: Disable	When controller detects any one harmonic distortion is greater than set value, it will initiate alarm signal and alarm information will be displayed on LCD.
52.		Auto ACK	(0-1)	0: Disable	
53.		Alarm Self-lock	(0-1)	0: Disable	
54.		Threshold	(0-200.0)%	10.0	
55.		Return Value	(0-200.0)%	5.0	
56.		Delay Value	(0.1-3600.0)s	5.0	
57.		Alarm Type	(0-6)	1: Warning	
58.		Active Range	(0-20)	3: After Gen Close	

SmartGen

No.	Items		Range	Default	Description
59.	Current SHD 2 Set	Action	(0-1)	0: Disable	
60.		Auto ACK	(0-1)	0: Disable	
61.		Alarm Self-lock	(0-1)	0: Disable	
62.		Threshold	(0-200.0)%	10.0	
63.		Return Value	(0-200.0)%	5.0	
64.		Delay Value	(0.1-3600.0)s	5.0	
65.		Alarm Type	(0-6)	1: Warning	
66.		Active Range	(0-20)	3: After Gen Close	
67.	Gen Current 1 Set	Action	(0-1)	1: Enable	Set value is percentage of gen rated full-load current, return value and delay value can be set according to actual situation.
68.		Auto ACK	(0-1)	0: Disable	
69.		Alarm Self-lock	(0-1)	0: Disable	
70.		Threshold	(0-200.0)%	100.0	
71.		Return Value	(0-200.0)%	99.0	
72.		Delay Value	(0.1-3600.0)s	20.0	
73.		Alarm Type	(0-6) 0: Block 1: Warning 2: Trip 3: Trip and Stop 4: Safety Trip 5: Safety Trip and Stop 6: Indication	1: Warning	
74.		Active Range	(0-20) 0: Always Active 1: Inactive 2: Before Gen Close 3: After Gen Close 4: Gen Close on Bus 5: No Gen Close on Bus 6: Gen Normal 7: Other Gens Close 8: Start Delay 9: After Gen Close Delay 10: Before Gen Close Delay	0: Always Active	

SmartGen

No.	Items		Range	Default	Description
			11: Gen Load Normal 12: Gen Close Delay on Bus 13: No Gen Close Delay on Bus 14: Gen Normal Delay 15: Other Gens Close Delay 16: Gen Load Normal Delay 17: Bus Available Delay 18-20: Reserved		
75.	Gen Current 2 Set	Action	(0-1)	1: Enable	
76.		Auto ACK	(0-1)	0: Disable	
77.		Alarm Self-lock	(0-1)	0: Disable	
78.		Threshold	(0-200.0)%	110.0	
79.		Return Value	(0-200.0)%	109.0	
80.		Delay Value	(0.1-3600.0)s	60.0	
81.		Alarm Type	(0-6)	2: Trip	
82.		Active Range	(0-20)	0: Always Active	
83.	Gen Current 3 Set	Action	(0-1)	1: Enable	
84.		Auto ACK	(0-1)	0: Disable	
85.		Alarm Self-lock	(0-1)	0: Disable	
86.		Threshold	(0-200.0)%	130.0	
87.		Return Value	(0-200.0)%	129.0	
88.		Delay Value	(0.1-3600.0)s	30.0	
89.		Alarm Type	(0-6)	2: Trip	
90.		Active Range	(0-20)	0: Always Active	
91.	Gen Current 4 Set	Action	(0-1)	1: Enable	
92.		Auto ACK	(0-1)	0: Disable	
93.		Alarm Self-lock	(0-1)	0: Disable	
94.		Threshold	(0-200.0)%	150.0	
95.		Return Value	(0-200.0)%	149.0	
96.		Delay Value	(0.1-3600.0)s	10.0	
97.		Alarm Type	(0-6)	2: Trip	
98.		Active Range	(0-20)	0: Always	

SmartGen

No.	Items		Range	Default	Description
				Active	
99.	Gen Current 5 Set	Action	(0-1)	0: Disable	Inverse time overcurrent. The larger the over current, the less the time. The formulation is: $T=t/((IA/IT)-1)^2$ T: Overload current delay value (s) t: Timing multiplier rate IA: Current load max current (L1/L2/L3) IT: Overload current set value For example: t=36.0 IA=550A IT=500A Then T=3600s (1h)
100.		Auto ACK	(0-1)	0: Disable	
101.		Alarm Self-lock	(0-1)	0: Disable	
102.		Threshold	(0-200.0)%	120.0	
103.		Return Value	(0-200.0)%	119.0	
104.		Delay Value	(0.1-36.0)s	12.0	
105.		Alarm Type	(0-6)	1: Warning	
106.		Active Range	(0-20)	0: Always Active	
107.	Gen Current 6 Set	Action	(0-1)	0: Disable	
108.		Auto ACK	(0-1)	0: Disable	
109.		Alarm Self-lock	(0-1)	0: Disable	
110.		Threshold	(0-200.0)%	140.0	
111.		Return Value	(0-200.0)%	139.0	
112.		Delay Value	(0.1-36.0)s	36.0	
113.		Alarm Type	(0-6)	2: Trip	
114.		Active Range	(0-20)	0: Always Active	
115.	Unbalanced Current 1 Set	Action	(0-1)	1: Enable	3P3W Two-meter method enable When controller detects unbalanced current is greater than set value, it will initiate alarm signal and alarm information will be displayed on LCD.
116.		Auto ACK	(0-1)	0: Disable	
117.		Alarm Self-lock	(0-1)	0: Disable	
118.		Threshold	(0-200.0)%	20.0	
119.		Return Value	(0-200.0)%	19.0	
120.		Delay Value	(0.1-3600.0)s	5.0	
121.		Alarm Type	(0-6)	1: Warning	
122.		Active Range	(0-20)	3: After Gen Close	
123.	Unbalanced Current 2 Set	Action	(0-1)	0: Disable	
124.		Auto ACK	(0-1)	0: Disable	
125.		Alarm Self-lock	(0-1)	0: Disable	
126.		Threshold	(0-200.0)%	20.0	
127.		Return Value	(0-200.0)%	19.0	
128.		Delay Value	(0.1-3600.0)s	5.0	
129.		Alarm Type	(0-6)	1: Warning	
130.		Active Range	(0-20)	3: After Gen Close	
131.	Over Power 1 Set	Action	(0-1)	1: Enable	When controller detects power value is greater than set value, it will initiate alarm signal and alarm information will be displayed on LCD.
132.		Auto ACK	(0-1)	0: Disable	
133.		Alarm Self-lock	(0-1)	0: Disable	
134.		Threshold	(0-200.0)%	120.0	
135.		Return Value	(0-200.0)%	119.0	

No.	Items		Range	Default	Description
136.		Delay Value	(0.1-3600.0)s	10.0	
137.		Alarm Type	(0-6)	1: Warning	
138.		Active Range	(0-20)	0: Always Active	
139.	Over Power 2 Set	Action	(0-1)	1: Enable	
140.		Auto ACK	(0-1)	0: Disable	
141.		Alarm Self-lock	(0-1)	0: Disable	
142.		Threshold	(0-200.0)%	130.0	
143.		Return Value	(0-200.0)%	129.0	
144.		Delay Value	(0.1-3600.0)s	5.0	
145.		Alarm Type	(0-6)	2: Trip	
146.		Active Range	(0-20)	0: Always Active	
147.	Reverse Power 1 Set	Action	(0-1)	1: Enable	When controller detects reverse power value is greater than set value, it will initiate alarm signal and alarm information will be displayed on LCD.
148.		Auto ACK	(0-1)	0: Disable	
149.		Alarm Self-lock	(0-1)	0: Disable	
150.		Threshold	(0-200.0)%	8.0	
151.		Return Value	(0-200.0)%	7.0	
152.		Delay Value	(0.1-3600.0)s	5.0	
153.		Alarm Type	(0-6)	1: Warning	
154.		Active Range	(0-20)	0: Always Active	
155.	Reverse Power 2 Set	Action	(0-1)	1: Enable	
156.		Auto ACK	(0-1)	0: Disable	
157.		Alarm Self-lock	(0-1)	0: Disable	
158.		Threshold	(0-200.0)%	15.0	
159.		Return Value	(0-200.0)%	14.0	
160.		Delay Value	(0.1-3600.0)s	2.0	
161.		Alarm Type	(0-6)	2: Trip	
162.		Active Range	(0-20)	0: Always Active	
163.	Low Power Factor 1 Alarm Set	Action	(0-1)	1: Enable	When controller detects power factor is lower than set value, it will initiate alarm signal and alarm information will be displayed on LCD.
164.		Auto ACK	(0-1)	0: Disable	
165.		Alarm Self-lock	(0-1)	0: Disable	
166.		Threshold	(0-200.0)%	0.70	
167.		Return Value	(0-200.0)%	0.75	
168.		Delay Value	(0.1-3600.0)s	5.0	
169.		Alarm Type	(0-6)	1: Warning	
170.		Active Range	(0-20)	16: Gen Load Normal Delay	
171.	Low Power Factor 2	Action	(0-1)	0: Disable	
172.		Auto ACK	(0-1)	0: Disable	

No.	Items		Range	Default	Description
173.	Alarm Set	Alarm Self-lock	(0-1)	0: Disable	
174.		Threshold	(0-200.0)%	0.70	
175.		Return Value	(0-200.0)%	0.75	
176.		Delay Value	(0.1-3600.0)s	5.0	
177.		Alarm Type	(0-6)	1: Warning	
178.		Active Range	(0-20)	16: Gen Load Normal Delay	
179.	Loss of Excitation 1 Alarm Set	Action	(0-1)	1: Enable	When controller detects the absolute value of reactive power is greater than set value, it will initiate alarm signal and alarm information will be displayed on LCD.
180.		Auto ACK	(0-1)	0: Disable	
181.		Alarm Self-lock	(0-1)	0: Disable	
182.		Threshold	(0-200.0)%	20.0	
183.		Return Value	(0-200.0)%	19.0	
184.		Delay Value	(0.1-3600.0)s	10.0	
185.		Alarm Type	(0-6)	1: Warning	
186.		Active Range	(0-20)	0: Always Active	
187.	Loss of Excitation 2 Alarm Set	Action	(0-1)	0: Disable	
188.		Auto ACK	(0-1)	0: Disable	
189.		Alarm Self-lock	(0-1)	0: Disable	
190.		Threshold	(0-200.0)%	20.0	
191.		Return Value	(0-200.0)%	19.0	
192.		Delay Value	(0.1-3600.0)s	10.0	
193.		Alarm Type	(0-6)	1: Warning	
194.		Active Range	(0-20)	0: Always Active	
195.	Active Distribution Imbalance 1	Action	(0-1)	1: Enable	Action for active distribution percentage is greater that set value.
196.		Auto ACK	(0-1)	0: Disable	
197.		Alarm Self-lock	(0-1)	0: Disable	
198.		Threshold	(0-200.0)%	20.0	
199.		Return Value	(0-200.0)%	18.0	
200.		Delay Value	(0.1-3600.0)s	60.0	
201.		Alarm Type	(0-6)	1: Warning	
202.		Active Range	(0-20)	3: After Gen Close	
203.	Active Distribution Imbalance 2	Action	(0-1) 0: Disable 1: Enable	0: Disable	
204.		Auto ACK	(0-1)	0: Disable	
205.		Alarm Self-lock	(0-1)	0: Disable	
206.		Threshold	(0-200.0)%	20.0	
207.		Return Value	(0-200.0)%	18.0	
208.		Delay Value	(0.1-3600.0)s	60.0	

SmartGen

No.	Items			Range	Default	Description
209.			Alarm Type	(0-6)	1: Warning	
210.			Active Range	(0-20)	3: After Gen Close	
211.	Reactive Distribution Imbalance 1		Action	(0-1)	1: Enable	Action for reactive distribution percentage is greater that set value.
212.			Auto ACK	(0-1)	0: Disable	
213.			Alarm Self-lock	(0-1)	0: Disable	
214.			Threshold	(0-200.0)%	20.0	
215.			Return Value	(0-200.0)%	18.0	
216.			Delay Value	(0.1-3600.0)s	60.0	
217.			Alarm Type	(0-6)	1: Warning	
218.			Active Range	(0-20)	3: After Gen Close	
219.	Reactive Distribution Imbalance 2		Action	(0-1)	0: Disable	
220.			Auto ACK	(0-1)	0: Disable	
221.			Alarm Self-lock	(0-1)	0: Disable	
222.			Threshold	(0-200.0)%	20.0	
223.			Return Value	(0-200.0)%	18.0	
224.			Delay Value	(0.1-3600.0)s	60.0	
225.			Alarm Type	(0-6)	1: Warning	
226.			Active Range	(0-20)	3: After Gen Close	
227.	NEL 1 Trip	Auto ACK		(0-1)	0: Disable	
228.		Alarm Self-lock		(0-1)	0: Disable	
229.		Alarm Type		(0-6)	1: Warning	
230.		Active Range		(0-20)	0: Always Active	
231.		Power Trip	Action	(0-1)	1: Enable	When any bus genset power is greater than set value, external non-essential load 1 will trip.
232.			Threshold	(0-200.0)%	100.0	
233.			Return Value	(0-200.0)%	99.0	
234.			Delay Value	(0.1-3600.0)s	5.0	
235.		Current Trip	Action	(0-1)	0: Disable	When any bus genset current is greater than set value, external non-essential load 1 will trip.
236.			Threshold	(0-200.0)%	100.0	
237.			Return Value	(0-200.0)%	99.0	
238.			Delay Value	(0.1-999.9)s	5.0	
239.		Chinese Character String			非重要负载 1	Character string only can be set via upper computer.
240.		English Character String			NEL1	

No.	Items			Range	Default	Description
241.	NEL2 Trip	Auto ACK		(0-1)	0: Disable	
242.		Alarm Self-lock		(0-1)	0: Disable	
243.		Alarm Type		(0-6)	1: Warning	
244.		Active Range		(0-20)	0: Always Active	
245.		Power Trip	Action	(0-1)	1: Enable	When any bus genset current is greater than set value, external non-essential load 2 will trip.
246.			Threshold	(0-200.0)%	100.0	
247.			Return Value	(0-200.0)%	99.0	
248.			Delay Value	(0.1-3600.0)s	8.0	
249.		Current Trip	Action	(0-1)	0: Disable	When any bus genset current is greater than set value, external non-essential load 2 will trip.
250.			Threshold	(0-200.0)%	100.0	
251.			Return Value	(0-200.0)%	99.0	
252.			Delay Value	(0.1-3600.0)s	8.0	
253.		Chinese Character String			非重要负载 2	Character string only can be set via upper computer.
254.		English Character String			NEL2	
255.	NEL 3 Trip	Auto ACK		(0-1)	0: Disable	
256.		Alarm Self-lock		(0-1)	0: Disable	
257.		Alarm Type		(0-6)	1: Warning	
258.		Active Range		(0-20)	0: Always Active	
259.		Power Trip	Action	(0-1)	1: Enable	When any bus genset current is greater than set value, external non-essential load 3 will trip.
260.			Threshold	(0-200.0)%	100.0	
261.			Return Value	(0-200.0)%	99.0	
262.			Delay Value	(0.1-3600.0)s	10.0	
263.		Current Trip	Action	(0-1)	0: Disable	When any bus genset current is greater than set value, external non-essential load 3 will trip.
264.			Threshold	(0-200.0)%	100.0	
265.			Return Value	(0-200.0)%	99.0	
266.			Delay Value	(0.1-3600.0)s	10.0	
267.		Chinese Character String			非重要负载 3	Character string only can be set via upper computer.
268.		English Character String			NEL3	

No.	Items		Range	Default	Description
269.	Heavy Consumer 1	Feedback Type	(0-4)	0	0 Digital Input Feedback 1 AI1 Input Feedback 2 AI2 Input Feedback 3 HMP300-1 Comm. Feedback 4 HMP300-2 Comm. Feedback
270.		Inquiry Signal	(0-1)	0	0 Continuous Signal; 1 Trigger Signal
271.		ID	(0-128)	128	Heavy consumer ID number.
272.		Priority	(0-128)	128	HC priority. The smaller the number, the higher the priority. If the priority is same, HC with small ID number, the priority is high.
273.		Rated Power	(0-60000)kW	60	HC rated power.
274.		Inquiry Power	(0-60000)kW	90	The percentage of rated power relative to heavy consumer.
275.		Stable Time	(0-3600)s	5	Bus stable time before HC running.
276.		ACK Time	(0-3600)s	5	Output ACK signal time after meeting HC demand. It is continuous output when set as 0.
277.		Feedback Failure Time	(0-3600)s	5	Feedback signal detection time after HC ACK. It doesn't detect feedback failure when set as 0.
278.		Request Failure Time	(0-3600)s	120	Time between receiving HC inquiry signal and HC ACK. Controller will initiate alarm signal when time is over. It doesn't detect request failure when set as 0.
279.		Request Failure Action	(0-2)	0	0 Alarm 1 Trip NEL 2 Alarm and Trip NEL
280.		Chinese Character String		重载 1	Character string only can be set via upper computer.
281.		English Character String		HC1	
282.	Heavy Consumer 2	Feedback Type	(0-4)	0	0 Digital Input Feedback 1 AI1 Input Feedback

No.	Items		Range	Default	Description
					2 AI2 Input Feedback 3 HMP300-1 Comm. Feedback 4 HMP300-2 Comm. Feedback
283.		Inquiry Signal	(0-1)	0	0 Continuous Signal; 1 Trigger Signal
284.		ID	(0-128)	128	Heavy consumer ID number.
285.		Priority	(0-128)	128	HC priority. The smaller the number, the higher the priority. If the priority is same, HC with small ID number, the priority is high.
286.		Rated Power	(0-60000)kW	60	HC rated power.
287.		Inquiry Power	(0-60000)kW	90	The percentage of rated power relative to heavy consumer.
288.		Stable Time	(0-3600)s	5	Bus stable time before HC running.
289.		ACK Time	(0-3600)s	5	Output ACK signal time after meeting HC demand. It is continuous output when set as 0.
290.		Feedback Failure Time	(0-3600)s	5	Feedback signal detection time after HC ACK. It doesn't detect feedback failure when set as 0.
291.		Request Failure Time	(0-3600)s	120	Time between receiving HC inquiry signal and HC ACK. Controller will initiate alarm signal when time is over. It doesn't detect request failure when set as 0.
292.		Request Failure Action	(0-2)	0	0 Alarm 1 Trip NEL 2 Alarm and Trip NEL
293.		Chinese Character String		重载 2	Character string only can be set via upper computer.
294.		English Character String		HC2	
295.	Heavy Consumer 3	Feedback Type	(0-4)	0	0 Digital Input Feedback 1 AI1 Input Feedback 2 AI2 Input Feedback 3 HMP300-1 Comm. Feedback

No.	Items		Range	Default	Description
					4 HMP300-2 Comm. Feedback
296.		Inquiry Signal	(0-1)	0	0 Continuous Signal; 1 Trigger Signal
297.		ID	(0-128)	128	Heavy consumer ID number.
298.		Priority	(0-128)	128	HC priority. The smaller the number, the higher the priority. If the priority is same, HC with small ID number, the priority is high.
299.		Rated Power	(0-60000)kW	60	HC rated power.
300.		Inquiry Power	(0-60000)kW	90	The percentage of rated power relative to heavy consumer.
301.		Stable Time	(0-3600)s	5	Bus stable time before HC running.
302.		ACK Time	(0-3600)s	5	Output ACK signal time after meeting HC demand. It is continuous output when set as 0.
303.		Feedback Failure Time	(0-3600)s	5	Feedback signal detection time after HC ACK. It doesn't detect feedback failure when set as 0.
304.		Request Failure Time	(0-3600)s	120	Time between receiving HC inquiry signal and HC ACK. Controller will initiate alarm signal when time is over. It doesn't detect request failure when set as 0.
305.		Request Failure Action	(0-2)	0	0 Alarm 1 Trip NEL 2 Alarm and Trip NEL
306.		Chinese Character String		重载 3	Character string only can be set via upper computer.
307.		English Character String		HC3	
308.	Heavy Consumer 4	Feedback Type	(0-4)	0	0 Digital Input Feedback 1 AI1 Input Feedback 2 AI2 Input Feedback 3 HMP300-1 Comm. Feedback 4 HMP300-2 Comm. Feedback
309.		Inquiry Signal	(0-1)	0	0 Continuous Signal; 1 Trigger

No.	Items		Range	Default	Description
					Signal
310.		ID	(0-128)	128	Heavy consumer ID number.
311.		Priority	(0-128)	128	HC priority. The smaller the number, the higher the priority. If the priority is same, HC with small ID number, the priority is high.
312.		Rated Power	(0-60000)kW	60	HC rated power.
313.		Inquiry Power	(0-60000)kW	90	The percentage of rated power relative to heavy consumer.
314.		Stable Time	(0-3600)s	5	Bus stable time before HC running.
315.		ACK Time	(0-3600)s	5	Output ACK signal time after meeting HC demand. It is continuous output when set as 0.
316.		Feedback Failure Time	(0-3600)s	5	Feedback signal detection time after HC ACK. It doesn't detect feedback failure when set as 0.
317.		Request Failure Time	(0-3600)s	120	Time between receiving HC inquiry signal and HC ACK. Controller will initiate alarm signal when time is over. It doesn't detect request failure when set as 0.
318.		Request Failure Action	(0-2)	0	0 Alarm 1 Trip NEL 2 Alarm and Trip NEL
319.		Chinese Character String		重载 4	Character string only can be set via upper computer.
320.		English Character String		HC4	

14.6 TIMER SETTING

Table 29 – Timer Settings

No.	Items	Range	Default	Description
Timer Setting				
1	Start Delay	(0-3600)s	5	Time from start signal is active to genset start.
2	Stop Delay	(0-3600)s	30	Time from start signal is deactivated to genset stop.
3	Start Output Delay	(0-3600)s	8	Start relay output time. When it is 0, means output constantly.
4	Stop Output Delay	(0-3600)s	5	Stop relay output time. When it is 0, means output constantly.
5	Start Wait Delay	(0-3600)s	120	Time from start signal is active to on-load requirement is satisfied. If the requirement doesn't be satisfied but delay time is up, then the warning alarm will be initiated.
6	Stop Wait Delay	(0-3600)s	20	After the "Wait For Stop" delay, the genset is stopped successfully if the voltage and frequency are 0; while the warning alarm will be initiated if they are not 0.
7	Load Stable Delay	(0-3600)s	5	When genset starts success and on-load stable delay is beginning.
8	Transient Fault Delay	(0-100.0)s	2.0	After the on-load stable delay, If the voltage and frequency requirements are not satisfied after the transient fault delay has expired, then the "Freq/Volt Fault" alarm will be initiated.
9	Alarm Start Delay	(0-3600)s	1	Start delay caused by trip or shutdown alarm.
10	Trigger Start Delay	(0-3600)s	1	Start delay caused by human triggered (e.g. manual transfer priority, heavy consumer request and etc.)
11	Alarm Stop Delay	(0-3600)s	1	Stop delay caused by the trip or shutdown alarms.
12	Trigger Stop Delay	(0-3600)s	1	Stop delay caused by human triggered (e.g. manual transfer priority, heavy consumer request and etc.)

No.	Items	Range	Default	Description
13	Cooling Delay	(0-3600)s	0	High speed cooling time before stop output.
14	Gen Insufficient Delay	(0-3600.0)s	1.5	When current genset power can't meet load demand, alarm will be initiated after delay.
15	Crank Success Delay	(0-3600.0)s	2.0	It is considered that crank success after conditions are met and delay continues in crank rest, then it enters stable load after crank rest is over.
16	Fast Start Delay	(0-3600)s	2	Time from auto fast start conditions are active to start output rest.
17	Fast Stop Delay	(0-3600)s	2	Time from auto fast stop conditions are active to stop output rest.
18	SG-DG Max. Grid-connection Time	(0-3600.0)s	60.0	The max grid-connection time of SG and DG, alarm will be initiated when the time is over.

14.7 ANALOG INPUT PORTS SETTING

Table 30 – Analog Input Ports Setting

No.	Items		Range	Default	Description
Analog Input Ports Setting					
Analog Input Port 1					
1	Function		(0-4)	0	0: Not Used 1: Fixed Active Power Input 2: Fixed Reactive Power Input 3: HC Feedback Input 4: Temperature Sensor
2	Type		(0-2)	0	0: Resistance Type 1: Current Type 2: Voltage Type
3	Input Min. Value		(0.0-1000.0)Ω/mA/V	0.0	Unit is changed according to type.
4	Input Max Value		(0.0-1000.0)Ω/mA/V	600.0	
5	HC Feedback Range		(0-60000)kW	100	
6	Open Action		(0-6)	1	
7	Curve Type		(0-15)	0	
8	Upper Limit 1	Action	(0-1)	0: Disable	
9		Auto ACK	(0-1)	0: Disable	
10		Alarm Self-lock	(0-1)	0: Disable	
11		Threshold	(0.0-1000.0)°C	100.0	
12		Return Value	(0.0-1000.0)°C	90.0	

No.	Items		Range	Default	Description
13		Delay Value	(0.1-3600.0)s	5.0	
14		Alarm Type	(0-6)	1	
15		Active Range	(0-20)	0: Always Active	
16	Upper Limit 2	Action	(0-1)	0: Disable	
17		Auto ACK	(0-1)	0: Disable	
18		Alarm Self-lock	(0-1)	0: Disable	
19		Threshold	(0.0-1000.0)°C	90.0	
20		Return Value	(0.0-1000.0)°C	80.0	
21		Delay Value	(0.1-3600.0)s	5.0	
22		Alarm Type	(0-6)	1	
23		Active Range	(0-20)	0: Always Active	
24	Lower Limit 1	Action	(0-1)	0: Disable	
25		Auto ACK	(0-1)	0: Disable	
26		Alarm Self-lock	(0-1)	0: Disable	
27		Threshold	(0.0-1000.0)°C	10.0	
28		Return Value	(0.0-1000.0)°C	20.0	
29		Delay Value	(0.1-3600.0)s	5.0	
30		Alarm Type	(0-6)	1	
31		Active Range	(0-20)	0: Always Active	
32	Lower Limit 2	Action	(0-1)	0: Disable	
33		Auto ACK	(0-1)	0: Disable	
34		Alarm Self-lock	(0-1)	0: Disable	
35		Threshold	(0.0-1000.0)°C	20.0	
36		Return Value	(0.0-1000.0)°C	30.0	
37		Delay Value	(0.1-3600.0)s	5.0	
38		Alarm Type	(0-6)	1	
39		Active Range	(0-20)	0: Always Active	
40	1st Point X (Resistance)		(0-6000)	0	User-defined curve.
41	2nd Point X (Resistance)		(0-6000)	21	
42	3rd Point X (Resistance)		(0-6000)	28	
43	4th Point X (Resistance)		(0-6000)	39	
44	5th Point X (Resistance)		(0-6000)	56	
45	6th Point X (Resistance)		(0-6000)	116	
46	7th Point X (Resistance)		(0-6000)	258	
47	8th Point X (Resistance)		(0-6000)	300	

No.	Items		Range	Default	Description
48	1st Point Y (Value)		(0-10000)	140	
49	2nd Point Y (Value)		(0-10000)	110	
50	3rd Point Y (Value)		(0-10000)	100	
51	4th Point Y (Value)		(0-10000)	90	
52	5th Point Y (Value)		(0-10000)	80	
53	6th Point Y (Value)		(0-10000)	60	
54	7th Point Y (Value)		(0-10000)	40	
55	8th Point Y (Value)		(0-10000)	20	
Analog Input Port 2					
56	Function		(0-4)	0	0: Not Used 1: Fixed Active Power Input 2: Fixed Reactive Power Input 3: HC Feedback Input 4: Temperature Sensor
57	Type		(0-2)	0	0: Resistance Type 1: Current Type 2: Voltage Type
58	Input Min. Value		(0.0-1000.0)Ω/mA/V	0.0	Unit is changed according to type.
59	Input Max Value		(0.0-1000.0)Ω/mA/V	600.0	
60	HC Feedback Range		(0-60000)kW	100	
61	Open Action		(0-6)	1	
62	Curve Type		(0-15)	0	
63	Upper Limit 1	Action	(0-1)	0: Disable	
64		Auto ACK	(0-1)	0: Disable	
65		Alarm Self-lock	(0-1)	0: Disable	
66		Threshold	(0.0-1000.0)°C	100.0	
67		Return Value	(0.0-1000.0)°C	90.0	
68		Delay Value	(0.1-3600.0)s	5.0	
69		Alarm Type	(0-6)	1	
70		Active Range	(0-20)	0: Always Active	
71	Upper Limit 2	Action	(0-1)	0: Disable	
72		Auto ACK	(0-1)	0: Disable	
73		Alarm Self-lock	(0-1)	0: Disable	
74		Threshold	(0.0-1000.0)°C	90.0	
75		Return Value	(0.0-1000.0)°C	80.0	
76		Delay Value	(0.1-3600.0)s	5.0	
77		Alarm Type	(0-6)	1	
78		Active Range	(0-20)	0: Always Active	

No.	Items		Range	Default	Description
79	Lower Limit 1	Action	(0-1)	0: Disable	
80		Auto ACK	(0-1)	0: Disable	
81		Alarm Self-lock	(0-1)	0: Disable	
82		Threshold	(0.0-1000.0)°C	10.0	
83		Return Value	(0.0-1000.0)°C	20.0	
84		Delay Value	(0.1-3600.0)s	5.0	
85		Alarm Type	(0-6)	1	
86		Active Range	(0-20)	0: Always Active	
87	Lower Limit 2	Action	(0-1)	0: Disable	
88		Auto ACK	(0-1)	0: Disable	
89		Alarm Self-lock	(0-1)	0: Disable	
90		Threshold	(0.0-1000.0)°C	20.0	
91		Return Value	(0.0-1000.0)°C	30.0	
92		Delay Value	(0.1-3600.0)s	5.0	
93		Alarm Type	(0-6)	1	
94		Active Range	(0-20)	0: Always Active	
95	1st Point X (Resistance)		(0-6000)	0	User-defined curve.
96	2nd Point X (Resistance)		(0-6000)	21	
97	3rd Point X (Resistance)		(0-6000)	28	
98	4th Point X (Resistance)		(0-6000)	39	
99	5th Point X (Resistance)		(0-6000)	56	
100	6th Point X (Resistance)		(0-6000)	116	
101	7th Point X (Resistance)		(0-6000)	258	
102	8th Point X (Resistance)		(0-6000)	300	
103	1st Point Y (Value)		(0-10000)	140	
104	2nd Point Y (Value)		(0-10000)	110	
105	3rd Point Y (Value)		(0-10000)	100	
106	4th Point Y (Value)		(0-10000)	90	
107	5th Point Y (Value)		(0-10000)	80	
108	6th Point Y (Value)		(0-10000)	60	
109	7th Point Y (Value)		(0-10000)	40	
110	8th Point Y (Value)		(0-10000)	20	

14.8 DIGITAL INPUT PORTS SETTING

HPM6-PPU input ports are low level active, response time is over 300ms.

Table 31 – Input Ports Settings

No.	Items	Range	Default	Description
Input Ports				
Digital Input Port 1				
111	Contents Setting	(0-150)	02	Close input.
112	Active Type	(0-1)	0	0: Close Activate 1: Open Activate
Digital Input Port 2				
113	Contents Setting	(0-150)	25	Manual mode input.
114	Active Type	(0-1)	0	0: Close Activate 1: Open Activate
Digital Input Port 3				
115	Contents Setting	(0-150)	28	Semi-auto mode input.
116	Active Type	(0-1)	0	0: Close Activate 1: Open Activate
Digital Input Port 4				
117	Contents Setting	(0-150)	29	Reserved.
118	Active Type	(0-1)	0	0: Close Activate 1: Open Activate
Digital Input Port 5				
119	Contents Setting	(0-150)	08	HC Inquiry 1.
120	Active Type	(0-1)	0	0: Close Activate 1: Open Activate
Digital Input Port 6				
121	Contents Setting	(0-150)	09	HC feedback 1.
122	Active Type	(0-1)	0	0: Close Activate 1: Open Activate
Digital Input Port 7				
123	Contents Setting	(0-150)	0	Not used.
124	Active Type	(0-1)	0	0: Close Activate 1: Open Activate
Digital Input Port 8				
125	Contents Setting	(0-150)	0	Not used.
126	Active Type	(0-1)	0	0: Close Activate 1: Open Activate
Digital Input Port 9				
127	Contents Setting	(0-150)	0	Not used.
128	Active Type	(0-1)	0	0: Close Activate 1: Open Activate
Digital Input Port 10				
129	Contents Setting	(0-150)	0	Not used.
130	Active Type	(0-1)	0	0: Close Activate 1: Open Activate
Digital Input Port 11				
131	Contents Setting	(0-150)	0	Not used.
132	Active Type	(0-1)	0	0: Close Activate 1: Open Activate
Digital Input Port 12				
133	Contents Setting	(0-150)	0	Not used.

No.	Items	Range	Default	Description
134	Active Type	(0-1)	0	0: Close Activate 1: Open Activate
Digital Input Port 13				
1	Contents Setting	(0-150)	0	Not used.
2	Active Type	(0-1)	0	0: Close Activate 1: Open Activate
Digital Input Port 14				
1	Contents Setting	(0-150)	0	Not used.
2	Active Type	(0-1)	0	0: Close Activate 1: Open Activate
Digital Input Port 15				
1	Contents Setting	(0-150)	0	Not used.
2	Active Type	(0-1)	0	0: Close Activate 1: Open Activate
Digital Input Port 16				
1	Contents Setting	(0-150)	0	Not used.
2	Active Type	(0-1)	0	0: Close Activate 1: Open Activate
Digital Input Port 17				
1	Contents Setting	(0-150)	0	Not used.
2	Active Type	(0-1)	0	0: Close Activate 1: Open Activate
Digital Input Port 18				
1	Contents Setting	(0-150)	0	Not used.
2	Active Type	(0-1)	0	0: Close Activate 1: Open Activate
Digital Input Port 19				
1	Contents Setting	(0-150)	0	Not used.
2	Active Type	(0-1)	0	0: Close Activate 1: Open Activate
Digital Input Port 20				
1	Contents Setting	(0-150)	0	Not used.
2	Active Type	(0-1)	0	0: Close Activate 1: Open Activate

Table 32 – Input Ports Function

No.	Name	Description	Auto Mode	Semi-auto Mode	Manual Mode
0	Not Used	Invalid	X	X	X
1	User Defined	User-defined actions when input port is active: 0: Block 1: Warning 2: Trip 3: Trip and Stop 4: Safety Trip 5: Safety Trip and Stop 6: Indication User-defined active conditions of input port: 0: Always Active	√	√	√

No.	Name	Description	Auto Mode	Semi-auto Mode	Manual Mode
		1: Inactive 2: Before Gen Close 3: After Gen Close 4: Gen Close on Bus 5: No Gen Close on Bus 6: Gen Normal 7: Other Gens Close 8: Start Delay 9: After Gen Close Delay 10: Before Gen Close Delay 11: Gen Load Normal 12: Gen Close Delay on Bus 13: No Gen Close Delay on Bus 14: Gen Normal Delay 15: Other Gens Close Delay 16: Gen Load Normal Delay 17: Bus Available Delay 18: Reserved 19: Reserved 20: Reserved Input ports names can be downloaded into controller after defined using PC software.			
2	Close Input	Switch close feedback signal input, used for indicating switch close/open status. If this signal no corresponding response in c/o, controller will initiate feedback fault alarm. There must be one and only one input port to select this function, otherwise controller will initiate feedback fault alarm.	√	√	√
3	Open Input	Switch open feedback signal input, opposite the close feedback signal. After it is configured for input port, switch status must be indicated with close input and open input. If two signals are not matched or signal is not correct in c/o, controller will initiate feedback fault alarm.	√	√	√
4	Speed Raise	Speed raise relay is active when the input is active.	X	X	√
5	Speed Drop	Speed drop relay is active when the input is active.	X	X	√

No.	Name	Description	Auto Mode	Semi-auto Mode	Manual Mode
6	Volt Raise	Voltage raise relay is active when the input is active.	X	X	√
7	Volt Drop	Voltage drop relay is active when the input is active.	X	X	√
8	HC 1 Inquiry	Heavy consumer 1 inquiry. Acknowledge signal is initiated if the requirements are satisfied. If not satisfied, standby gensets will be started to meet with the requirement.	√	√	X
9	HC 1 Feedback	After breaker closing, feedback signal is sent to controller to ensure the HC1 has loaded.	√	√	X
10	HC 2 Inquiry	Heavy consumer 2 inquiry. Acknowledge signal is initiated if the requirements are satisfied. If not satisfied, standby gensets will be started to meet with the requirement.	√	√	X
11	HC 2 Feedback	After breaker closing, feedback signal is sent to controller to ensure the HC2 has loaded.	√	√	X
12	HC 3 Inquiry	Heavy consumer 3 inquiry. Acknowledge signal is initiated if the requirements are satisfied. If not satisfied, standby gensets will be started to meet with the requirement.	√	√	X
13	HC 3 Feedback	After breaker closing, feedback signal is sent to controller to ensure the HC3 has loaded.	√	√	X
14	HC 4 Inquiry	Heavy consumer 4 inquiry. Acknowledge signal is initiated if the requirements are satisfied. If not satisfied, standby gensets will be started to meet with the requirement.	√	√	X
15	HC 4 Feedback	After breaker closing, feedback signal is sent to controller to ensure the HC4 has loaded.	√	√	X
16	Engine Fault	Engine fault feedback input.	√	√	X
17	Alarm Inhibit	All alarms are inhibited after input is active.	√	√	√
18	Alarm Mute	Mute the panel buzzer and audible alarm not output.	√	√	√
19	Alarm Reset	Reset alarms.	√	√	√

No.	Name	Description	Auto Mode	Semi-auto Mode	Manual Mode
20	Alarm ACK	Acknowledge all alarms.	√	√	√
21	Alarm Unlock	Unlock all self-locked alarms.	√	√	√
22	Lamp Test	Test all the LED lights.	√	√	√
23	Light Consumer	The controller doesn't open breaker even if the system load has fallen below the set value.	√	√	X
24	Fixed Power IN	Fixed power output, when the "Fixed Power Input" is active, the active power and the reactive power can be adjusted via fixed power setting parameter, or when the external adjust input is active, the active power and the reactive power can be adjusted via external SPEED IN port and VOLT IN port.	√	√	X
25	Manual Mode	Manual mode is carried out when the input is active.	√	X	X
26	Linear Start	Linear start mode is carried out when the input is active.	√	X	X
27	Duty Time Start	Duty time start mode is carried out when the input is active.	√	X	X
28	Reserved	Reserved	/	/	/
29	Semi-auto Mode	Semi-auto mode is carried out when the input is active.	√	√	√
30	Remote Closing	Synchronous closing process will be carried out when the input is active.	X	√	X
31	Remote Opening	Opening process will be carried out when the input is active.	X	√	X
32	Remote Start	The genset will start automatically when the input is active.	X	√	X
33	Remote Stop	The genset will stop after unload open when the input is active.	X	√	X
34	Safe Mode	An additional genset will be started even if the power request is satisfied when the input is active.	√	X	X
35	Standby Engine	Connect the output signal when the preparation work is done. If the function is selected, the engine will be started when the input is active.	√	√	X
36	Remote Mode	If it is configured, system is in remote control status when the input is active, remote control (start, close, open, stop)	X	√	X

No.	Name	Description	Auto Mode	Semi-auto Mode	Manual Mode
		function is active. When the input is inactive, remote control (start, close, open, stop) function is inactive.			
37	External Active Adjust	Simulate adjust frequency/active power input is active when the input port is active. Controller automatically adjust frequency/active power according to configuration when the input port is inactive.	X	√	√
38	Start Inhibit	Semi-auto start and auto start are inhibited.	√	√	X
39	External Overcurrent Short Circuit	External over current short circuit trip signal.	√	√	X
40	Override Input	Genset is inhibited to trip or shutdown except for over frequency and over current.	√	√	X
41	Emergency Trip and Stop	Trip and stop immediately.	√	√	X
42	Top Priority	Configure the priority of controller as the highest level.	√	√	X
43	2nd Start Input	If it fails to start, after this input is active, it will issue start signal again.	√	√	X
44	Manual Mode	When input is active, all gensets on the bus become manual mode.	√	√	√
45	Semi-auto Mode	When input is active, all gensets on the bus become semi-auto mode.	√	√	√
46	Reserved		/	/	/
47	Light Consumer	When input is active, all gensets on the bus are active for light consumer.	√	X	X
48	Safe Mode Input	When input is active, all gensets on the bus become safe mode.	√	X	X
49	Reserved	Reserved	/	/	/
50	Genset On-load Input Inhibit	When input is active, genset close is inhibited.	√	√	X
51	Non-auto Mode HC Permission	When input is active, in manual mode/semi-auto mode, if genset capacity meets heavy consumer request power, it will also output heavy consumer response, heavy consumer permission signal.	√	√	√
52	Limited On-grid No.	When input is active, limit genset on grid number based on configuration (max. on-grid number).	√	√	X

No.	Name	Description	Auto Mode	Semi-auto Mode	Manual Mode
53	Engine Running Feedback	Engine running feedback active signal.	√	√	X
54	Shore Power Supply Input	This input is active when shore power is closed.	√	√	√
55	Bustie Switch 1 Break Input	When input port is active, divide a phase of bus based on current bus genset configuration; only the unit scheduled on this bus is active.	√	√	X
56	Capacity Insufficient Reduce Load Input	When heavy consumer is requesting, if all normal gensets are on grid and still cannot meet requested power, and this input is active, it will make NEL trip.	√	√	√
57	Abnormal Trip of Main Switch	When the input port is active, the controller issues trip alarms.	√	√	√
58	Numbers of Running Units Reserved	When the input port is active, the units with load running on grid >= numbers of running units reserved.	√	√	√
59	Forced Manual Mode	Controller is forced to enter manual mode when the input port is active. Its priority is higher than system mode.	√	√	√
60	Inhibit Blackout	Block is inhibited when the input port is active.	√	√	X
61	Reserved	Reserved	/	/	/
62	Reserved	Reserved	/	/	/
63	SG Enabled	If module is not set as SG mode, the controller will work in SG mode when input port is active.	√	√	X
64	SG/DG Transferring	When input port is active, DG starts to take load, otherwise, SG starts to take load.	√	√	X
65	SG Solenoid Valve Closing Feedback	When the controller works in SG mode and input port is active, SG is allowed to start. Otherwise, SG is not allowed to start.	√	√	X
66	Drop Power Input	When input port is active, the controller will limit the max. output power of the genset according to the set drop value.	√	√	X
67	SG On-load Input	When input port is active, SG starts to take load and select load distribution according to load mode.	√	√	X
68	DG On-load Input	When input port is active, DG starts to take load and select load distribution according to load mode.	√	√	X

No.	Name	Description	Auto Mode	Semi-auto Mode	Manual Mode
69	DG Inactive Input	When input port is active, all DG are disconnected and the load is transferred to the other power supply units.	√	√	X
70	Bus Outage Closing Input	When input port is active, DG controller detects that the bus is outage then allows DG switch to close.	√	√	X
71	Bustie Switch 0 Close Feedback	Bustie switch 0 is ring bustie switch, i.e. if there are N buses, it is the contact switch between bus 1 and bus N. Power management system considers that ring bus switch is closed when the input port is active.	√	√	X
72	Bustie Switch 1 Close Feedback	Bustie switch close feedback input between bus 1 and bus 2.	√	√	X
73	Bustie Switch 2 Close Feedback	Bustie switch close feedback input between bus 2 and bus 3.	√	√	X
74	Bustie Switch 3 Close Feedback	Bustie switch close feedback input between bus 3 and bus 4.	√	√	X
75	Bustie Switch 4 Close Feedback	Bustie switch close feedback input between bus 4 and bus 5.	√	√	X
76	Bustie Switch 5 Close Feedback	Bustie switch close feedback input between bus 5 and bus 6.	√	√	X
77	Bustie Switch 0 Open Feedback	Bustie switch 0 is ring bustie switch, ring bus switch open feedback input.	√	√	X
78	Bustie Switch 1 Open Feedback	Bustie switch open feedback input between bus 1 and bus 2.	√	√	X
79	Bustie Switch 2 Open Feedback	Bustie switch open feedback input between bus 2 and bus 3.			
80	Bustie Switch 3 Open Feedback	Bustie switch open feedback input between bus 3 and bus 4.	√	√	X
81	Bustie Switch 4 Open Feedback	Bustie switch open feedback input between bus 4 and bus 5.	√	√	X
82	Bustie Switch 5 Open Feedback	Bustie switch open feedback input between bus 5 and bus 6.	√	√	X
83	BTB0 Series Switch Close	It is close feedback input of series switch of ring bustie switch. Series switch means	√	√	X

No.	Name	Description	Auto Mode	Semi-auto Mode	Manual Mode
	Feedback	that if there are N buses, other series switches besides bus contact switch between bus 1 and bus N.			
84	BTB1 Series Switch Close Feedback	Bustie series switch close feedback input between bus 1 and bus 2.	√	√	X
85	BTB2 Series Switch Close Feedback	Bustie series switch close feedback input between bus 2 and bus 3.	√	√	X
86	BTB3 Series Switch Close Feedback	Bustie series switch close feedback input between bus 3 and bus 4.	√	√	X
87	BTB4 Series Switch Close Feedback	Bustie series switch close feedback input between bus 4 and bus 5.	√	√	X
88	BTB5 Series Switch Close Feedback	Bustie series switch close feedback input between bus 1 and bus 6.	√	√	X
89	Reserved Power 1 Input	Power management system reserves response set power for bus when the input port is active.	√	X	X
90	Reserved Power 2 Input		√	X	X
91	Reserved Power 3 Input		√	X	X
92	GB Storage Feedback	It means genset mains switch energy storage is finished, power management system can initiate close operation when the input port is active.	√	√	X
93	Single Pulse Speed Raise Input	In manual mode, when the input port is closed once, the minimum pulse value is output from speed control output port.	X	X	√
94	Single Pulse Speed Drop Input		X	X	√
95	Single Pulse Voltage Raise Input	In manual mode, when the input port is closed once, the minimum pulse value is output from voltage control output port.	X	X	√
96	Single Pulse Voltage Drop Input		X	X	√
97	Shore Switch 0	Shore switch close feedback input.	√	√	X

No.	Name	Description	Auto Mode	Semi-auto Mode	Manual Mode
	Close Feedback Input				
98	Shore Switch 1 Close Feedback Input		√	√	X
99	Shore Switch 2 Close Feedback Input		√	√	X
100	Shore Switch 3 Close Feedback Input		√	√	X
101	External Reactive Adjust	Simulate adjust voltage/reactive power input is active when the input port is active. Controller automatically adjust voltage/reactive power according to configuration when the input port is inactive.	√	√	X
102	Reserved	Reserved	/	/	/
103	Manual Mode (Self-restore)	It allows users to manually control the system and automatically restore to the previous status or mode after operation is completed.	√	√	√
104	Adjust GOV by Input Port	When the input port is active, the GOV system of the genset can be adjusted through the specific input port.	√	√	X
105	Adjust AVR by Input Port	When the input port is active, the AVR system of the genset can be adjusted through the specific input port.	√	√	X
106	Remote Control Mode Input	When the input port is active, remote systems or devices are allowed to control the equipment through the input port.	√	√	X
107	Self-check Abnormal No Transfer to Auto Mode	When the input port is active, if the system detects abnormities during self-check, it is not allowed to transfer to auto mode.	√	X	X
108	Controller GOV Enable Input	When the input port is active, the controller is allowed to adjust the speed of the equipment.	√	√	X
109	Controller AVR Enable Input	When the input port is active, the controller is allowed to adjust the voltage of the equipment.	√	√	X

No.	Name	Description	Auto Mode	Semi-auto Mode	Manual Mode
110	Panel Keys Inhibit	When the input port is active, operation through device panel keys is inhibited.	√	√	√
111~150	Reserved	Reserved	/	/	/

SmartGen

14.9 DIGITAL OUTPUT PORTS SETTING

Table 33 – Output Ports Setting

No.	Items	Range	Default	Description
Digital Output Ports				
Digital Output Port 1				
1	Contents Setting	Alarm/Function (0-255)	Function 007	Crank output.
2	Active Type	(0-1)	0	0: Normally Open 1: Normally Close
Digital Output Port 2				
3	Contents Setting	Alarm/Function (0-255)	Function 008	Stop output.
4	Active Type	(0-1)	0	0: Normally Open 1: Normally Close
Digital Output Port 3				
5	Contents Setting	Alarm/Function (0-255)	Function 001	Speed raise output.
6	Active Type	(0-1)	0	0: Normally Open 1: Normally Close
Digital Output Port 4				
7	Contents Setting	Alarm/Function (0-255)	Function 002	Speed drop output.
8	Active Type	(0-1)	0	0: Normally Open 1: Normally Close
Digital Output Port 5				
9	Contents Setting	Alarm/Function (0-255)	Function 062	HC1 ACK output.
10	Active Type	(0-1)	0	0: Normally Open 1: Normally Close
Digital Output Port 6				
11	Contents Setting	Alarm/Function (0-255)	Function 005	Close output.
12	Active Type	(0-1)	0	0: Normally Open 1: Normally Close
Digital Output Port 7				
13	Contents Setting	Alarm/Function (0-255)	Fixed 006	Open output.
14	Active Type	(0-1)	0	0: Normally Open 1: Normally Close
Digital Output Port 8				
15	Contents Setting	Alarm/Function (0-255)	Function 000	Not used.
16	Active Type	(0-1)	0	0: Normally Open 1: Normally Close
Digital Output Port 9				
17	Contents Setting	Alarm/Function (0-255)	Function 000	Not used.
18	Active Type	(0-1)	0	0: Normally Open 1: Normally Close
Digital Output Port 10				

SmartGen

No.	Items	Range	Default	Description
19	Contents Setting	Alarm/Function (0-255)	Function 000	Not used.
20	Active Type	(0-1)	0	0: Normally Open 1: Normally Close
Digital Output Port 11				
21	Contents Setting	Alarm/Function (0-255)	Function 000	Not used.
22	Active Type	(0-1)	0	0: Normally Open 1: Normally Close
Digital Output Port 12				
23	Contents Setting	Alarm/Function (0-255)	Function 000	Not used.
24	Active Type	(0-1)	0	0: Normally Open 1: Normally Close
Digital Output Port 13				
25	Contents Setting	Alarm/Function (0-255)	Function 000	Not used.
26	Active Type	(0-1)	0	0: Normally Open 1: Normally Close
Digital Output Port 14				
27	Contents Setting	Alarm/Function (0-255)	Function 000	Not used.
28	Active Type	(0-1)	0	0: Normally Open 1: Normally Close
Digital Output Port 15				
29	Contents Setting	Alarm/Function (0-255)	Function 000	Not used.
30	Active Type	(0-1)	0	0: Normally Open 1: Normally Close
Digital Output Port 16				
31	Contents Setting	Alarm/Function (0-255)	Function 000	Not used.
32	Active Type	(0-1)	0	0: Normally Open 1: Normally Close
Digital Output Port 17				
33	Contents Setting	Alarm/Function (0-255)	Function 000	Not used.
34	Active Type	(0-1)	0	0: Normally Open 1: Normally Close
Digital Output Port 18				
35	Contents Setting	Alarm/Function (0-255)	Function 000	Not used.
36	Active Type	(0-1)	0	0: Normally Open 1: Normally Close
Digital Output Port 19				
37	Contents Setting	Alarm/Function (0-255)	Function 000	Not used.
38	Active Type	(0-1)	0	0: Normally Open 1: Normally Close
Digital Output Port 20				
39	Contents Setting	Alarm/Function (0-255)	Function 000	Not used.

No.	Items	Range	Default	Description
40	Active Type	(0-1)	0	0: Normally Open 1: Normally Close
Defined Combination Output 1				
1	S1 Active Type	(0-1)0	0	Active type: 0 Close for inactive 1 Close for active Digital output port set function list.
2	S1 Set	Alarm/Function (0-255)	Alarm 000	
3	S2 Active Type	(0-1)0	0	
4	S2 Set	Alarm/Function (0-255)	Alarm 000	
5	S3 Active Type	(0-1)0	0	
6	S3 Set	Alarm/Function (0-255)	Alarm 000	
7	S4 Active Type	(0-1)0	0	
8	S4 Set	Alarm/Function (0-255)	Alarm 000	
9	S5 Active Type	(0-1)0	0	
10	S5 Set	Alarm/Function (0-255)	Alarm 000	
11	Delay Active Time	(0.0-60.0)s	0	
12	Delay Inactive Time	(0.0-60.0)s	0	
13	Active Time	(0.0-60.0)s	0	
Defined Combination Output 2-10				
1	S1 Active Type	(0-1)0	0	Active type: 0 Close for inactive 1 Close for active Digital output port set function list.
2	S1 Set	Alarm/Function (0-255)	Alarm 000	
3	S2 Active Type	(0-1)0	0	
4	S2 Set	Alarm/Function (0-255)	Alarm 000	
5	S3 Active Type	(0-1)0	0	
6	S3 Set	Alarm/Function (0-255)	Alarm 000	
7	S4 Active Type	(0-1)0	0	
8	S4 Set	Alarm/Function (0-255)	Alarm 000	
9	S5 Active Type	(0-1)0	0	
10	S5 Set	Alarm/Function (0-255)	Alarm 000	
11	Delay Active Time	(0.0-60.0)s	0	
12	Delay Inactive Time	(0.0-60.0)s	0	
13	Active Time	(0.0-60.0)s	0	
Defined Period Output 1				
1	S1 Active Period	(0-0x7ff)	0	Active type: 0 Close for inactive
2	S1 Delay Active	(0.0-3600.0)s	0	

No.	Items	Range	Default	Description
	Time			1 Close for active Digital output port set function list.
3	S1 Active Time	(0.0-3600.0)s	0	
4	S2 Active Type	(0-1)0	0	
5	S2 Set	Alarm/Function (0-255)	Alarm 000	
Defined Period Output 2-10				
1	S1 Active Period	(0-0x7ff)	0	Active type: 0 Close for inactive 1 Close for active Digital output port set function list.
2	S1 Delay Active Time	(0.0-3600.0)s	0	
3	S1 Active Time	(0.0-3600.0)s	0	
4	S2 Active Type	(0-1)0	0	
5	S2 Set	Alarm/Function (0-255)	Alarm 000	

Table 34 – Output Ports Function

No.	Name	Description	Remark
0	Not Used	This port is invalid.	
1	Speed Raise	Active when the generator is raising speed.	
2	Speed Drop	Active when the generator is dropping speed.	
3	Volt Raise	Active when the generator is raising voltage.	
4	Volt Drop	Active when the generator is dropping voltage.	
5	Close Gen	Active when the close generator requirements are reached.	
6	Open Gen	Active when the open generator requirements are reached.	
7	Crank Output	Active when unit starts.	
8	Stop Output	Active when stopping.	
9	Remote Control	System can control its status via communication.	
10	Generator OK	Active when the rated voltage and rated frequency are reached.	
11	Common Alarm	Active when genset alarm occurs.	
12	Common Indication Alarm	Active when genset indication alarm occurs.	
13	Common Warning Alarm	Active when genset warning alarm occurs.	
14	Common Block Alarm	Active when genset block alarm occurs.	
15	Common Safety Trip Alarm	Active when genset safety trip alarm occurs.	
16	Common Safety Trip and Stop Alarm	Active when genset safety trip and stop alarm occurs.	
17	Common Trip Alarm	Active when genset trips alarm occurs.	

No.	Name	Description	Remark
18	Common Trip and Stop Alarm	Active when genset trip and stop alarm occurs.	
19	Input 1 Active	Active when input port 1 is active.	
20	Input 2 Active	Active when input port 2 is active.	
21	Input 3 Active	Active when input port 3 is active.	
22	Input 4 Active	Active when input port 4 is active.	
23	Input 5 Active	Active when input port 5 is active.	
24	Input 6 Active	Active when input port 6 is active.	
25	Input 7 Active	Active when input port 7 is active.	
26	Input 8 Active	Active when input port 8 is active.	
27	Input 9 Active	Active when input port 9 is active.	
28	Input 10 Active	Active when input port 10 is active.	
29	Input 11 Active	Active when input port 11 is active.	
30	Input 12 Active	Active when input port 12 is active.	
31	Input 13 Active	Active when input port 13 is active.	
32	Input 14 Active	Active when input port 14 is active.	
33	Input 15 Active	Active when input port 15 is active.	
34	Input 16 Active	Active when input port 16 is active.	
35	Input 17 Active	Active when input port 17 is active.	
36	Input 18 Active	Active when input port 18 is active.	
37	Input 19 Active	Active when input port 19 is active.	
38	Input 20 Active	Active when input port 20 is active.	
39	Reserved	Reserved	
40	Reserved	Reserved	
41	Defined Period Output 1	Set output according to defined period.	
42	Defined Period Output 2		
43	Defined Period Output 3		
44	Defined Period Output 4		
45	Defined Period Output 5		
46	Defined Period Output 6		
47	Defined Period Output 7		
48	Defined Period Output 8		
49	Defined Period Output 9		
50	Defined Period Output 10		
51	Defined Combination Output 1	Set output according to defined combination.	
52	Defined Combination Output 2		
53	Defined Combination Output 3		
54	Defined Combination		

No.	Name	Description	Remark
	Output 4		
55	Defined Combination Output 5		
56	Defined Combination Output 6		
57	Defined Combination Output 7		
58	Defined Combination Output 8		
59	Defined Combination Output 9		
60	Defined Combination Output 10		
61	Gen Load Indication	Active when gen takes load.	
62	HC1 ACK	Active when bus left available power can meet heavy consumer 1 inquiry power.	
63	HC2 ACK	Active when bus left available power can meet heavy consumer 2 inquiry power.	
64	HC3 ACK	Active when bus left available power can meet heavy consumer 3 inquiry power.	
65	HC4 ACK	Active when bus left available power can meet heavy consumer 4 inquiry power.	
66	Start Failure	Active when start failure alarm occurs.	
67	Manual Mode	Active in Manual mode.	
68	Semi-auto Mode	Active in Semi-auto mode.	
69	Reserved	Reserved	
70	Light Consumer	Active when light consumer outputs.	
71	NEL 1 Trip	Active when non-essential load 1 trip occurs.	
72	NEL 2 Trip	Active when non-essential load 2 trip occurs.	
73	NEL 3 Trip	Active when non-essential load 3 trip occurs.	
74	Engine Fault	Active when engine fault signal outputs.	
75	Start Success	Active when the generator voltage and frequency have reached the requirement.	
76	Synchronizing	Active when genset is synchronizing.	
77	Reserved		
78	Pre-close Output	Storage output of genset main switch.	
79	Reserved		
80	Reserved		
81	PLC Flag 1	PLC logic flag outputs.	
82	PLC Flag 2		
83	PLC Flag 3		
84	PLC Flag 4		

No.	Name	Description	Remark
85	PLC Flag 5		
86	PLC Flag 6		
87	PLC Flag 7		
88	PLC Flag 8		
89	PLC Flag 9		
90	PLC Flag 10		
91	PLC Flag 11		
92	PLC Flag 12		
93	PLC Flag 13		
94	PLC Flag 14		
95	PLC Flag 15		
96	PLC Flag 16		
97	PLC Flag 17		
98	PLC Flag 18		
99	PLC Flag 19		
100	PLC Flag 20		
101	Bu Voltage Abnormal		
102	Bus Frequency Abnormal		
103	Bus Voltage/Frequency Abnormal		
104	Lamp Alarm	When common alarm or common block occurs, it outputs cyclically every 1 second; it keeps outputting after acknowledge; if common trip and stop alarm occurs, it outputs cyclically every 0.5 second; it keeps outputting after acknowledge.	
105	Audible Alarm	Output at common alarms, close to output after acknowledge.	
106	Unload Failure		
107	Unload Output		
108	Gen Insufficient Capacity	When controller detects all normal gensets are on grid, and remaining power cannot request power, it outputs.	
109	HC1 Permission	When HC requests, and bus power is met, it outputs; when power is not met, it doesn't output. If HC feedback signal is active, it continues to output.	
110	HC2 Permission		
111	HC3 Permission		
112	HC4 Permission		
113	Unbalanced Distribution of Active Power	Outputs when active power percentage and target active power percentage is greater than the set value.	
114	Unbalanced Distribution of Reactive Power	Outputs when reactive power percentage and target reactive power percentage is greater	

No.	Name	Description	Remark
		than the set value.	
115	Unbalanced Distribution of Load	Outputs when either unbalanced active distribution or reactive distribution is active.	
116	Self-check Normal Output	Output when self-check conditions are met according to setting.	
117	Reserved		
118	Reserved		
119	Reserved		
120	Reserved		
121	SG Solenoid Valve Closing	SG solenoid valve closes and outputs.	
122	SG Solenoid Valve Opening	SG solenoid valve opens and outputs.	
123	SG Insufficient Capacity	When the controller operates in SG mode and load receiving mode, if SG on-load is active, but SG capacity is insufficient to receive the full load, it outputs.	
124	DG Insufficient Capacity	When the controller operates in SG mode and load receiving mode, if DG on-load is active, but DG capacity is insufficient to receive the full load, it outputs.	
125	SG & DG Paralleled Number Over Limit	When SG and DG are on-grid at the same time or to be synchronized, the DG switch number exceeds the set value, it outputs.	
126	Bus Freq. Change Abnormal	Output when the bus frequency change rate exceeds the set value and the delay value.	
127	Gen. Freq. Change Abnormal	Generating frequency change rate exceeds the set value and the delay value.	
128	Blackout	The controller outputs when it detects that the whole ship is black out.	
129	NEL 1 Pre-tripping	Output when controller detects power, current is greater than NEL trip set value and in delay.	
130	NEL 2 Pre-tripping		
131	NEL 3 Pre-tripping		
132	1# DIN16 IN1 Active	Outputs when DIN16-1 module input is active.	
133	1# DIN16 IN2 Active		
134	1# DIN16 IN3 Active		
135	1# DIN16 IN4 Active		
136	1# DIN16 IN5 Active		
137	1# DIN16 IN6 Active		
138	1# DIN16 IN7 Active		
139	1# DIN16 IN8 Active		
140	1# DIN16 IN9 Active		
141	1# DIN16 IN10 Active		

No.	Name	Description	Remark
142	1# DIN16 IN11 Active		
143	1# DIN16 IN12 Active		
144	1# DIN16 IN13 Active		
145	1# DIN16 IN14 Active		
146	1# DIN16 IN15 Active		
147	1# DIN16 IN16 Active		
148	2# DIN16 IN1 Active	Outputs when DIN16-2 module input is active.	
149	2# DIN16 IN2 Active		
150	2# DIN16 IN3 Active		
151	2# DIN16 IN4 Active		
152	2# DIN16 IN5 Active		
153	2# DIN16 IN6 Active		
154	2# DIN16 IN7 Active		
155	2# DIN16 IN8 Active		
156	2# DIN16 IN9 Active		
157	2# DIN16 IN10 Active		
158	2# DIN16 IN11 Active		
159	2# DIN16 IN12 Active		
160	2# DIN16 IN13 Active		
161	2# DIN16 IN14 Active		
162	2# DIN16 IN15 Active		
163	2# DIN16 IN16 Active		
164	Reserved		
165	Reserved		
166	Local Controller Comm. Failure	Communication failure with the local controller.	
167	1#HMP300 Comm. Failure	Communication failure with the 1# HMP300 controller.	
168	2#HMP300 Comm. Failure	Communication failure with the 2# HMP300 controller.	
169	Reserved		
170	Reserved		
171	Reserved		
172	PLC Function 1	The result status of PLC function.	
173	PLC Function 2		
174	PLC Function 3		
175	PLC Function 4		
176	PLC Function 5		
177	PLC Function 6		
178	PLC Function 7		
179	PLC Function 8		

No.	Name	Description	Remark
180	PLC Function 9		
181	PLC Function 10		
182	PLC Function 11		
183	PLC Function 12		
184	PLC Function 13		
185	PLC Function 14		
186	PLC Function 15		
187	PLC Function 16		
188	PLC Function 17		
189	PLC Function 18		
190	PLC Function 19		
191	PLC Function 20		
192	SG & DG Paralleled Number Over Limit	The number of paralleled SG and DG for the equipment has exceeded the limit.	
193	SG Insufficient Capacity	The SG capacity to be loaded is insufficient.	
194	DG Insufficient Capacity	The DG capacity to be loaded is insufficient.	
195	SG & DG Grid-connection Timeout	The operation time of the SG and DG in parallel has exceeded the specified time limit.	
196	SG Solenoid Valve Fault	The SG solenoid valve has failed.	
197	Reserved		
198	Reserved		
199	Reserved		
200	Reserved		
201	Reserved		
202	Reserved		
203	Reserved		
204	Reserved		
205	Reserved		
206	Reserved		
207	Reserved		
208	Voltage Asynchrony	The voltage of system fails to synchronize.	
209	Frequency Asynchrony	The frequency of system fails to synchronize.	
210	Phase Asynchrony	The phase of system fails to synchronize.	
211	AI1 Fault	Analog input fault has output.	
212	AI2 Fault		
213	Bustie Series Switch 0 Feedback Fault	The feedback signal of the bustie series switch does not match the actual status.	
214	Bustie Series Switch 1 Feedback Fault		
215	Bustie Series Switch 2 Feedback Fault		

No.	Name	Description	Remark
216	Bustie Series Switch 3 Feedback Fault		
217	Bustie Series Switch 4 Feedback Fault		
218	Bustie Series Switch 5 Feedback Fault		
219	HC1 Feedback Failure	The controller did not receive the HC feedback signal within the effective time.	
220	HC2 Feedback Failure		
221	HC3 Feedback Failure		
222	HC4 Feedback Failure		
223	Shore Switch Feedback Failure	The feedback signal of the shore power switch does not match the actual status.	
224	HC1 Request Failure	If the controller does not have sufficient remaining available power to provide the HC acknowledgement output within the effective time, the request fails.	
225	HC2 Request Failure		
226	HC3 Request Failure		
227	HC4 Request Failure		
228	Switch Error	There is a fault or abnormality in the network switch.	
229	IP Address Error	The device is configured with an incorrect IP address, which leads to incorrect identification or network connection failure.	
230	MAC Address Error	The device's MAC address is incorrect or does not match, which leads to network communication issues or incorrect identification to the device.	
231	SLD Configuration Error	There are incorrect connections, symbols, or parameter settings in the system's single-line diagram.	
232	Shore Switch 0 Feedback Fault	The feedback signal of the shore power switch does not match the actual status.	
233	Shore Switch 1 Feedback Fault		
234	Shore Switch 2 Feedback Fault		
235	Shore Switch 3 Feedback Fault		
236	Ring Disconnect	The original ring network has been broken, so the network is no longer closed.	
237	DG Inactive IN Fault	The input function of the port is abnormal or the status is incorrect.	
238	Bus Unavailable Close IN Fault	The input function of the port is abnormal or the status is incorrect.	

No.	Name	Description	Remark
239	Reserved		
240	Current THD 1	It means the harmonic distortion protection, and the corresponding alarm will output.	
241	Current THD 2		
242	Voltage SHD 1		
243	Voltage SHD 2		
244	Current SHD 1		
245	Current SHD 2		
246	Gen Vector Shift 1	It means generation vector shift protection, and the corresponding alarm will output.	
247	Gen Vector Shift 2		
247-255	Reserved		

Table 35 – Output Ports Alarms

No.	Name	Description	Remark
0	Bus Over Voltage 1	Refer to alarm protection function description.	
1	Bus Over Voltage 2		
2	Bus Over Voltage 3		
3	Bus Under Voltage 1		
4	Bus Under Voltage 2		
5	Bus Under Voltage 3		
6	Bus Over Frequency 1		
7	Bus Over Frequency 2		
8	Bus Over Frequency 3		
9	Bus Under Frequency 1		
10	Bus Under Frequency 2		
11	Bus Under Frequency 3		
12	Bus ROCOF		
13	Bus Vector Shift		
14	Bus Loss of Phase		
15	Bus Reverse Phase Sequence		
16	Gen Over Voltage 1		
17	Gen Over Voltage 2		
18	Gen Over Voltage 3		
19	Gen Under Voltage 1		
20	Gen Under Voltage 2		
21	Gen Under Voltage 3		
22	Gen Over Frequency 1		
23	Gen Over Frequency 2		
24	Gen Over Frequency 3		
25	Gen Under Frequency 1		
26	Gen Under Frequency 2		

No.	Name	Description	Remark
27	Gen Under Frequency 3		
28	Gen Over Current 1		
29	Gen Over Current 2		
30	Gen Over Current 3		
31	Gen Over Current 4		
32	Gen Over Current 5		
33	Gen Over Current 6		
34	Gen ROCOF 1		
35	Gen ROCOF 2		
36	Gen Reverse Power 1		
37	Gen Reverse Power 2		
38	Gen Over Power 1		
39	Gen Over Power 2		
40	Gen Voltage Imbalance 1		
41	Gen Voltage Imbalance 2		
42	Gen Current Imbalance 1		
43	Gen Current Imbalance 2		
44	Earth Fault 1		
45	Earth Fault 2		
46	Gen Loss of Excitation 1		
47	Gen Loss of Excitation 2		
48	Voltage THD 1		
49	Voltage THD 2		
50	Low Power Factor 1		
51	Low Power Factor 2		
52	NEL 1 Trip		
53	NEL 2 Trip		
54	NEL 3 Trip		
55	Power Over Voltage 1		
56	Power Over Voltage 2		
57	Power Under Voltage 1		
58	Power Under Voltage 2		
59	Unbalanced Active Distribution 1		
60	Unbalanced Active Distribution 2		
61	Unbalanced Reactive Distribution 1		
62	Unbalanced Reactive Distribution 2		
63	Gen Insufficient Capacity		
64	Gen Loss of Phase		
65	Gen Reverse Phase Sequence		
66	Crank Failure		
67	No Running Feedback Fault		

No.	Name	Description	Remark
68	Stop Failure		
69	Engine Fault		
70	Frequency/Voltage Fault		
71	Frequency Error		
72	External Start		
73	External Stop		
74	External Overcurrent Short		
75	Emergency Stop		
76	Reserved		
77	Few Bus Module		
78	ID Address Error		
79	Bus Input Fault		
80	Abnormal Trip of Main Switch		
81	External Open of Main Switch		
82	Close Failure		
83	Open Failure		
84	Close Feedback Failure		
85	Open Feedback Failure		
86	Sync. Failure		
87	Unload Failure		
88	Bustie Switch 0 Feedback Fault		
89	Bustie Switch 1 Feedback Fault		
90	Bustie Switch 2 Feedback Fault		
91	Bustie Switch 3 Feedback Fault		
92	Bustie Switch 4 Feedback Fault		
93	Bustie Switch 5 Feedback Fault		
94	Bustie Switch 6 Feedback Fault		
95	Reserved		
96	Input Port 1		
97	Input Port 2		
98	Input Port 3		
99	Input Port 4		
100	Input Port 5		
101	Input Port 6		
102	Input Port 7		
103	Input Port 8		
104	Input Port 9		
105	Input Port 10		
106	Input Port 11		
107	Input Port 12		
108	Input Port 13		

SmartGen

No.	Name	Description	Remark
109	Input Port 14		
110	Input Port 15		
111	Input Port 16		
112	Input Port 17		
113	Input Port 18		
114	Input Port 19		
115	Input Port 20		
116	Reserved		
117	Reserved		
118	AI1 Open		
119	AI2 Open		
120	AI1 Upper Limit 1 Alarm		
121	AI1 Upper Limit 2 Alarm		
122	AI1 Lower Limit 1 Alarm		
123	AI1 Lower Limit 2 Alarm		
124	AI2 Upper Limit 1 Alarm		
125	AI2 Upper Limit 2 Alarm		
126	AI2 Lower Limit 1 Alarm		
127	AI2 Lower Limit 2 Alarm		
128	1#DIN16 IN1		
129	1#DIN16 IN2		
130	1#DIN16 IN3		
131	1#DIN16 IN4		
132	1#DIN16 IN5		
133	1#DIN16 IN6		
134	1#DIN16 IN7		
135	1#DIN16 IN8		
136	1#DIN16 IN9		
137	1#DIN16 IN10		
138	1#DIN16 IN11		
139	1#DIN16 IN12		
140	1#DIN16 IN13		
141	1#DIN16 IN14		
142	1#DIN16 IN15		
143	1#DIN16 IN16		
144	2#DIN16 IN1		
145	2#DIN16 IN2		
146	2#DIN16 IN3		
147	2#DIN16 IN4		
148	2#DIN16 IN5		
149	2#DIN16 IN6		

No.	Name	Description	Remark
150	2#DIN16 IN7		
151	2#DIN16 IN8		
152	2#DIN16 IN9		
153	2#DIN16 IN10		
154	2#DIN16 IN11		
155	2#DIN16 IN12		
156	2#DIN16 IN13		
157	2#DIN16 IN14		
158	2#DIN16 IN15		
159	2#DIN16 IN16		
160	1#DIN16 Comm. Failure		
161	2#DIN16 Comm. Failure		
162	1#DOUT16 Comm. Failure		
163	2#DOUT16 Comm. Failure		
164	Reserved		
165	Reserved		
166	Local Controller Comm. Failure		
167	1#HMP300 Comm. Failure		
168	2#HMP300 Comm. Failure		
169	Reserved		
170	Reserved		
171	Reserved		
172	PLC Function 1		
173	PLC Function 2		
174	PLC Function 3		
175	PLC Function 4		
176	PLC Function 5		
177	PLC Function 6		
178	PLC Function 7		
179	PLC Function 8		
180	PLC Function 9		
181	PLC Function 10		
182	PLC Function 11		
183	PLC Function 12		
184	PLC Function 13		
185	PLC Function 14		
186	PLC Function 15		
187	PLC Function 16		
188	PLC Function 17		
189	PLC Function 18		
190	PLC Function 19		

SmartGen

No.	Name	Description	Remark
191	PLC Function 20		
192	SG&DG Paralleled No. Over Limit		
193	SG Insufficient Capacity		
194	DG Insufficient Capacity		
195	SG&DG Grid-connection Timeout		
196	SG Solenoid Valve Fault		
197	Reserved		
198	Reserved		
199	Reserved		
200	Reserved		
201	Reserved		
202	Reserved		
203	Reserved		
204	Reserved		
205	Reserved		
206	Reserved		
207	Reserved		
208	Voltage Asynchrony		
209	Frequency Asynchrony		
210	Phase Asynchrony		
211	AI1 Fault		
212	AI2 Fault		
213	Bustie Series Switch 0 Feedback Fault		
214	Bustie Series Switch 1 Feedback Fault		
215	Bustie Series Switch 2 Feedback Fault		
216	Bustie Series Switch 3 Feedback Fault		
217	Bustie Series Switch 4 Feedback Fault		
218	Bustie Series Switch 5 Feedback Fault		
219	HC1 Feedback Failure		
220	HC2 Feedback Failure		
221	HC3 Feedback Failure		
222	HC4 Feedback Failure		
223	Shore Switch Feedback Failure		
224	HC1 Request Failure		
225	HC2 Request Failure		
226	HC3 Request Failure		

No.	Name	Description	Remark
227	HC4 Request Failure		
228	Switch Error		
229	IP Address Error		
230	Reserved		
231	SLD Configuration Error		
232	Shore Switch 0 Feedback Fault		
233	Shore Switch 1 Feedback Fault		
234	Shore Switch 2 Feedback Fault		
235	Shore Switch 3 Feedback Fault		
236	Ring Disconnect		
237	DG Inactive IN Fault		
238	Bus Unavailable Close IN Fault		
239	Reserved		
240	Current THD 1		
241	Current THD 2		
242	Voltage SHD 1		
243	Voltage SHD 2		
244	Current SHD 1		
245	Current SHD 2		
246	Gen Vector Shift 1		
247	Gen Vector Shift 2		
248	Reserved		
249	Reserved		
250	Reserved		
251	Reserved		
252	Reserved		
253	Reserved		
254	Reserved		
255	Reserved		

SmartGen

14.10 ANALOG OUTPUT PORTS SETTING

Table 36 – Analog Output Ports Setting

No.	Item		Range	Default	Description
Analog Output Ports					
Analog Output Port 1					
1	Function		(0-4)	1	0: Not used 1: GOV 2: AVR 3: Transmitter
2	Output Type		(0-0)	0	0: Current
3	Transmitter Config.	Config	(0-20)	0	Refer to Transmitter Configuration Functions.
4		OUT Min.	(-20.0-20.0)mA	4	Transmitter configuration min value corresponds to output min value, max value corresponds to output max value.
5		OUT Max.	(-20.0-20.0)mA	20	
6		Config Min.	(-1000-32000)	0	
7		Config Max.	(-1000-32000)	500	
Analog Output Port 2					
8	Function		(0-4)	2	0: Not used 1: GOV 2: AVR 3: Transmitter
9	Output Type		(0-0)	0	0: Current
10	Transmitter Config.	Config	(0-20)	0	Refer to Transmitter Configuration Functions.
11		OUT Min.	(-20.0-20.0)mA	4	Transmitter configuration min value corresponds to output min value, max value corresponds to output max value.
12		OUT Max.	(-20.0-20.0)mA	20	
13		Config Min.	(-1000-32000)	0	
14		Config Max.	(-1000-32000)	500	
Analog Output Port 3					
15	Function		(0-4)	0	0: Not used 1: GOV 2: AVR 3: Transmitter
16	Output Type		(0-0)	0	0: Current

No.	Item		Range	Default	Description
17	Transmitter Config.	Config	(0-20)	0	Refer to Transmitter Configuration Functions.
18		OUT Min.	(-20.0-20.0)mA	4	Transmitter configuration min value corresponds to output min value, max value corresponds to output max value.
19		OUT Max.	(-20.0-20.0)mA	20	
20		Config Min.	(-1000-32000)	0	
21		Config Max.	(-1000-32000)	500	
Analog Output Port 4					
22	Function		(0-4)	0	0: Not used 1: GOV 2: AVR 3: Transmitter
23	Output Type		(0-0)	0	0: Current
24	Transmitter Config.	Config	(0-20)	0	Refer to Transmitter Configuration Functions.
25		OUT Min.	(-20.0-20.0)mA	4	Transmitter configuration min value corresponds to output min value, max value corresponds to output max value.
26		OUT Max.	(-20.0-20.0)mA	20	
27		Config Min.	(-1000-32000)	0	
28		Config Max.	(-1000-32000)	500	

Table 37 – Transmitter Configuration Functions

No.	Name	Description
0	Not Used	Transmitter function is not used.
1	Bus Voltage	
2	Bus Frequency	
3	Bus Active Power	
4	Bus Reactive Power	
5	Bus Apparent Power	
6	Reserved	
7	Gen Voltage	
8	Gen Frequency	
9	Gen Active Power	
10	Gen Reactive Power	

No.	Name	Description
11	Gen Apparent Power	
12	Gen Power Factor	
13	Gen A Phase Current	
14	Gen B Phase Current	
15	Gen C Phase Current	
16	Gen Max. Current	
17	Bus Left Power	
18	Gen Left Power	
19	Reserved	
20	PLC Variant X1	
21	PLC Variant X2	
22	PLC Variant X3	
23	PLC Variant X4	
24	PLC Variant X5	
25	PLC Variant X6	
26	Reserved	
27	Reserved	
28	Reserved	
29	Reserved	
30	Reserved	

SmartGen

14.11 GB SETTING

Table 38 – GB Settings

No.	Item		Range	Default	Description
GB Setting					
1	Close Delay		(0-20.0)s	3.0	Close pulse width, it is continuous output when set to 0.
2	Open Delay		(0-20.0)s	3.0	Open pulse width, it is continuous output when set to 0.
3	Action Time		(0-2000)ms	100	Time for switch receives close signal to contact closes.
4	Storage Time		(0-3000)ms	100	Coil storage time before actions.
5	Semi-auto Intelligent Open		(0-1)	1	0: Disable; 1: Enable. When it is enabled, in semi-auto mode, it intelligently judges whether to open.
6	Failure Setting	Enable	(0-1)	1: Enable	There is no corresponding signal for close/open feedback input port in switch close/open, and the alarm action for no corresponding signal inputs for other feedback signals (like current).
7		Auto ACK	(0-1)	0: Disable	
8		Alarm Self-lock	(0-1)	1: Enable	
9		Action	(0-6)	0: Block	
10	Feedback Fault Setting	Enable	(0-1)	1: Enable	Action in close/open feedback and switch real status are inconsistent.
11		Auto ACK	(0-1)	0: Disable	
12		Alarm Self-lock	(0-1)	0: Disable	
13		Action	(0-6)	1: Warning	
14	Solenoid Valve Close Time		(0-20.0)s	5.0	Close pulse width, it is continuous output when set to 0.
15	Solenoid Valve Open Time		(0-20.0)s	5.0	Open pulse width, it is continuous output when set to 0.

NOTE: If close feedback input port can't be detected when close command is sent and after close delay, controller will initiate close failure alarm. If there are other close signals (like there is current) besides close input por, controller will initiate close feedback fault. If open feedback input port can't be detected when open command is sent and after open delay, controller will initiate open failure alarm. If there are other open signals (like no current) besides close input por, controller will initiate open feedback fault.

14.12 SYNCHRONIZATION SETTING

Table 39 – Synchronization Settings

No.	Item		Range	Default	Description
Synchronization Setting					
1	GOV Output		(0-2)	1	0: Internal relay; 1: Internal analog; 2: None.
2	GOV Reverse Output Enable		(0-1)	0	0: Disable; 1: Enable.
3	GOV Loading Action		(0-2)	1	0: None; 1: Adjust rated frequency; 2: Adjust center point.
4	AVR Output		(0-2)	1	0: Internal relay; 1: Internal analog; 2: None.
5	AVR Reverse Output Enable		(0-1)	0	0: Disable; 1: Enable.
6	AVR Loading Action		(0-2)	1	0: None; 1: Adjust rated voltage; 2: Adjust center point.
7	Load (P) Feedback Coefficient		(0-100)%	50	The proportion of load frequency adjustment PID coefficient in whole load active adjustment coefficient.
8	Load (Q) Feedback Coefficient		(0-100)%	50	The proportion of load voltage adjustment PID coefficient in whole load reactive adjustment coefficient.
9	Active Adjust. Limit		(0-50.0)%	30.0	The max adjustment deviation of current power from the target power value.
10	Reactive Adjust. Limit		(0-50.0)%	30.0	
11	Active Distribution Weight		(0.0-200.0)%	100.0	The weight of power distribution. For example, when the active distribution weight is 50%, the current genset shares load according to 50% of rated power.
12	Reactive Distribution Weight		(0.0-200.0)%	100.0	
13	Freq. Droop	Enable	(0-1)	0	When it is enabled, target frequency adjusts according to active load.
14		No-load	(0.0-200.0)%	101.0	
15		Full-load	(0.0-200.0)%	100.0	
16	Volt Droop	Enable	(0-1)	0	When it is enabled, target voltage adjusts according to reactive load.
17		No-load	(0.0-200.0)%	101.0	
18		Full-load	(0.0-200.0)%	100.0	
19	Dead Bus Voltage		(1.0-20.0)%	10.0	Bus is unavailable when bus voltage is below the dead bus voltage.
20	Sync. Voltage Difference		(1.0-10.0)%	5.0	Voltage synchronization is considered when voltage difference percentage of gen and bus is lower than sync voltage difference.
21	Sync. Positive Freq. Difference		(0-2.00)Hz	0.20	Frequency synchronization is considered when frequency difference of gen and bus is lower than sync positive frequency difference
22	Sync. Negative		(0-2.00)Hz	0.10	

No.	Item	Range	Default	Description
	Freq. Difference			and greater than sync. negative frequency difference.
23	Sync. Phase Difference	(0-20)°	10	Phase synchronization is considered when the initial phase difference of gen and bus is lower than sync phase difference.
24	Phase Compensation	(0-360.0)°	0.0	Phase difference compensation of gen and bus sampling.
25	Sync. Failure Time	(5.0-300.0)s	60.0	When synchronization signal is not detected within set sync. failure time, corresponding alarm will be initiated according to action type.
26	Sync. Failure Action	(0-6)	1	0: Block; 1: Warning; 2: Trip; 3: Trip and Stop; 4: Safety Trip; 5: Safety Trip and Stop; 6: Indication.
27	Start Options	(0-2)	0	0: Linear Start; 1: Duty Time Start.
28	Active Output Mode	(0-2)	0	0 Share Power Output 1 Fixed Power Output 2 Analog Control Output
29	Reactive Output Mode	(0-2)	0	0 Share Power Output 1 Fixed Power Output 2 Analog Control Output
30	Reserved Running Gensets	(1-16)	1	The minimum load running gensets on the bus.
31	Max On-grid Gensets	(0-16)	16	The maximum scheduling on-grid gensets on the current bus.
32	Priority Active	(0-1)	0	If it is disabled, power management function will not change bus genset start/stop status due to priority change. It will only be active when bus needs to schedule other gensets to start.
33	Top Priority	(0-1)	1	When it is enabled, press top priority key, the current genset will have the highest priority, other gensets will sort again; When it is disabled, only the current genset has the highest priority, other genset priority has no change.
34	System Mode	(0-1)	0	If it is enabled, all bus gensets controllers mode will be changed by switching mode (key or input port).
35	Duty Start Run	(0.1-100.0)h	5.0	When it is duty time start, genset with smallest running time will start first, the next genset with less running time will start when

No.	Item	Range	Default	Description
				start time reaches set duty time. The running time here refers to the accumulated running time of user A.
36	Bus Blackout Starts	(0-16)	0	Started gensets in bus blackout.
37	Bus Blackout Start Running Time	(0-3600)s	600	Continuous running time of started gensets in bus blackout.
38	Short Close Times	(0-1)	0	Again close times when short trip is detected.
39	Bus Blackout Mode	(0-2)	0	0 No Change 1 Semi-auto Mode 2 Auto Mode
40	Inhibit Blackout	(0-1)	0	0: Disable; 1: Enable. When it is enabled in auto mode, only one genset on the bus takes load, other general trip and stop alarm open except for overspeed, overfrequency, emergency trip and stop, overcurrent is inhibited. Fault genset can open after other normal gensets starting with load. In manual mode, when only one genset on the bus takes load, general trip, stop alarm open and stop and manual open and stop are inhibited.
41	Continuous Supply	(0-1)	0	0: Disable; 1: Enable. When it is enabled in auto mode, loading genset on the bus has trip and stop alarm, the genset can disconnect after other standby gensets start and close. If voltage/frequency trip or stop alarm occurs, the fault genset will open firdt after other normal gensets normally run and meet load conditions, then normal gensets will close.
42	Scheduling Start Mode	(0-3)	0	0: Active Power Percentage; 1: Left Active Power; 2: Apparent Power Percentage; 3: Left Apparent Power.
43	Max. Start Load Percentage	(0-100)%	80	Bus load percentage for scheduling other gensets to start.
44	Min. Stop Load Percentage	(0-100)%	60	Bus load percentage for scheduling other gensets to stop.
45	Left Start Power	(0-20000)kW	50	Bus left power for scheduling other gensets

No.	Item	Range	Default	Description
				to start.
46	Left Stop Power	(0-20000)kW	80	Bus left power for scheduling other gensets to stop.
47	Fast Start/stop	(0-1)	0	
48	Max Load PCT of Fast Start	(0-100)%	90	Bus load percentage for scheduling other gensets to start.
49	Min Load PCT of Fast Stop	(0-100)%	30	Bus load percentage for scheduling other gensets to stop.。
50	Left Fast Start Power	(0-20000)kW	30	Bus left power for scheduling other gensets to start.
51	Left Fast Stop Power	(0-20000)kW	100	Bus left power for scheduling other gensets to stop.

14.13 SYNCHRONOUS CALIBRATION

Table 40 – Synchronous Calibration List

No.	Item	Range	Default	Description
Synchronous Calibration				
1	Multi-set Comm. No.	(1-16)	2	Genset numbers on the network bus.
2	Comm. Alarm Action	(0-6)	1	Communication alarm action when the module on the network bus is less than set multi-set communication numbers.
3	Module ID	(0-15)	1	ID in the communication network. The ID should be unique throughout the whole communication network.
4	Priority	(0-15)	1	The smaller of the number, the higher of the priority. It is invalid in the HPM6-PPU mode.
5	GOV SW1	(0-20.00)	0	Default central current is 0mA.
6	GOV SW2	(0-20.00)	2.00	Default current range is (-3.0~+3.0)mA.
7	AVR SW1	(0-20.00)	0	Default central current is 0mA.
8	AVR SW2	(0-20.00)	2.00	Default current range is (-3.0~+3.0)mA.
Frequency Sync				
9	Frequency Difference	(0-1.00)Hz	0.10	Adjusting generator frequency to make it greater than the difference value of bus frequency, that is the sliding frequency difference of dynamic sync.

No.	Item		Range	Default	Description
10	Analog Control	Gain	(0-2000)%	20	The internal analog is adjusted to control the engine speed before parallel connection.
11		Stability	(0-2000)%	20	
12		Change	(0-2000)%	0	
13	Relay Control	Period	(100-10000)ms	2000	The internal relay is adjusted to control the engine speed before parallel connection.
14		Min Adjust Pulse	(10-1600)ms	100	
15		Gain	(0-30000)%	10	
16		Dead Band	(0-10.0)%	1.0	
Voltage Sync					
17	Analog Control	Gain	(0-2000)%	20	The internal analog is adjusted to control the generator voltage before parallel connection.
18		Stability	(0-2000)%	20	
19		Change	(0-2000)%	0	
20	Relay Control	Period	(100-10000)ms	2000	The internal relay is adjusted to control the generator voltage before parallel connection.
21		Min Adjust Pulse	(10-1600)ms	100	
22		Gain	(0-30000)%	10	
23		Dead Band	(0-10.0)%	1.0	
Phase Sync					
24	Phase Stable Time		(0-20.0)s	2.0	It will close after phase synchronization and delay set value in static synchronization.
25	Analog Control	Gain	(0-2000)%	20	The internal analog is adjusted to control the generator phase before parallel connection.
26		Stability	(0-2000)%	20	
27		Change	(0-2000)%	0	
28	Relay Control	Period	(100-10000)ms	2000	The internal relay is adjusted to control the generator phase before parallel connection.
29		Min Adjust Pulse	(10-1600)ms	100	
30		Gain	(0-30000)%	10	
31		Dead Band	(0-10.0)%	1.0	
Active Power Control					
32	Voltage Control	Gain	(0-2000)%	20	The internal analog voltage is adjusted to control active power after parallel connection.
33		Stability	(0-2000)%	20	
34		Change	(0-2000)%	0	
35	Relay Control	Period	(100-10000)ms	2000	The internal relay is adjusted to control active power after parallel connection.
36		Min, Adjust Pulse	(10-1600)ms	100	
37		Gain	(0-30000)%	10	
38		Dead Band	(0-10.0)%	1.0	
Reactive Power Control					
39	Voltage Control	Gain	(0-2000)%	20	The internal analog voltage is adjusted to control reactive power after parallel connection.
40		Stability	(0-2000)%	20	
41		Change	(0-2000)%	0	

No.	Item		Range	Default	Description
42	Relay Control	Period	(100-10000)ms	2000	The internal relay is adjusted to control reactive power after parallel connection.
43		Min. Adjust Pulse	(10-1600)ms	100	
44		Gain	(0-30000)%	10	
45		Dead Band	(0-10.0)%	1.0	
46	Min. Load Percentage		(0-100.0)%	10.0	The active power percentage of the unit from soft unloaded to the opening.
47	Fixed Active Power%		(0-100.0)%	30.0	The percentage of active power output in fixed power mode.
48	Fixed Reactive Power Mode		(0-1)	0	0: Power Percentage; 1: Power Factor
49	Fixed Reactive Power%		(0-100.0)%	8.0	The percentage of reactive power output in fixed power mode.
50	Fixed Power Factor		(0-100.0)%	8.0	The genset power factor in fixed power mode.
Fixed Active Power					
51	Output Min. Value		(0-100)%	5	When the active load percentage of any one on-grid genset is lower than set min. value and continues min delay time, fixed power genset outputs in active power.
52	Output Min. Value Delay		(0-3600.0)s	0.5	
53	Output Max. Value		(0-100)%	95	When the active load percentage of any one on-grid genset is greater than set max. value and continues max delay time, fixed power genset outputs in active power.
54	Output Max. Value Delay		(0-3600.0)s	0.5	
Fixed Reactive Power					
55	Output Min. Value		(0-100)%	5	When the reactive load percentage of any one on-grid genset is lower than set min. value and continues min delay time, fixed power genset outputs in reactive power.
56	Output Min. Value Delay		(0-3600.0)s	0.5	
57	Output Max. Value		(0-100)%	95	When the reactive load percentage of any one on-grid genset is greater than set max. value and continues max delay time, fixed power genset outputs in reactive power.
58	Output Max. Value Delay		(0-3600.0)s	0.5	
SG Fixed Power Mode					
59	DG Min. On-load%		(0-100.0)%	0.0	When the controller works in both SG mode and fixed power mode, if the total load is lower than the

No.	Item	Range	Default	Description
				active power of SG fixed output, DG takes the set value and the remaining power is carried by SG. If this value is 0, when the total power is lower than the fixed active power output of SG, DG does not start with load.
60	SG Max. On-load%	(0-100.0)%	100.0	When the controller works in both SG mode and fixed power mode, if the total load is greater than the SG and DG fixed active power percentage, DG will be loaded to the fixed active power percentage, the remaining power will be loaded by SG as much as possible and the maximum load will be the setting value. If the total load is even greater, it will be balanced by SG and DG.
61	Max. Load% of SG Receiving	(0-100.0)%	100.0	When the controller works in both SG mode and load-receiving mode, if SG on-load mode is effective, the load must be lower than receiving rated power percentage (the setting value) before SG is closing.
62	DG Stop% When SG Receiving	(0-100.0)%	50.0	When the controller works in both SG mode and load-receiving mode, if SG on-load is effective, when SG on-load is greater than the setting value of the total load, DG will start unloading and stopping and DG will stop soft loading.
63	Max. No. of SG & DG Sync.	(1-16)	16	When SG is synchronized, the current limit number of on-grid DG is higher than the setting value, closing and grid connection of SG is not allowed.
64	Analog Control Inactive Action	(0-2)	0	1: Previous Power Output; 2: Fixed Power Value Output; 2: Share Power Output.
65	SC Takeover Load %	(0-150.0)%	100.0	When the controller is in SC mode

No.	Item	Range	Default	Description
				and load takeover mode, if shore power need to close and take load, it will close only when the load is lower than the rated shore power takeover power percentage (this set value).
66	SC Sync. Max. DG No.	(1-16)	16	The current number limit of DG in parallel when the shore power synchronizes. If this value is higher than the set value, shore power closing and paralleling are not allowed.
67	TR Mode Enable	(0-1)	0	In SC mode, if this parameter is enabled, it will change the icons and related names displayed on the controller screen into transformer.
68	SC-DG Max. Parallel Time	(0-3600.0)s	60.0	Maximum parallel time for SC and DG, if exceeded, an alarm will be issued.

SmartGen

14.14 ENGINE SETTING

Table 41 – Engine Parameter Settings

No.	Item		Range	Default	Description
Engine Setting					
1	Controller Type		(0-7)	0	0: None; 1: HMC6000S; 2: HMC6000E; 3: HMC6000A; 4: HMC6000ED; 5: HMC6000EG; 6: HMC9000S; 7: HMC9000A.
2	Engine Controller	Action	(0-1)	0: Disable	Communication failure setting of engine controller.
3		Auto ACK	(0-1)	0: Disable	
4		Alarm Self-lock	(0-1)	0: Disable	
5		Delay Value	(0.1-3600.0)s	3.0	
6		Alarm Type	(0-6)	1: Warning	
7		Active Range	(0-20)	0: Always Active	

14.15 DISPLAY SETTING

Table 42 – Display Parameter Settings

No.	Item		Range	Default	Description
Local Setting					
1	Comm. Address		(1-254)	0	RS485 communication address of display module.
2	Backlight Time		(1-3600)s	300	When display module is not used for a long time, LCD backlight brightness should be adjusted to less.
3	Brightness		(1-10)	10	10-level can be adjusted.
4	Start Interface		(0-1)	1: Enable	
5	Start Interface Display Time		(1-3600)s	3	
6	Start Image				Only can be set in upper computer.
7	RS485 Comm.	Baud Rate	(0-3)	2	0: 2400bps 1: 4800bps 2: 9600bps 3: 19200bps
8		Stop Bit	(0-1)	0	0: 2-bit

No.	Item	Range	Default	Description
				1: 1-bit
10	Network	(0-1)	1: Enable	
11	IP Address	(0-255)	192.168.0.188	
12	Subnet Mask	(0-255)	255.255.255.0	
13	Default Gateway	(0-255)	192.168.0.1	
14	DNS Address	(0-255)	192.168.0.1	
15	MAC Address	(0-255)		Each controller has different MAC.
16	Output Port Content	Alarm/Function (0-255)	Alarm 000	Not used
17	Output Port Output Type	(0-1)	0	0: Normally Open; 1: Normally Close.

14.16 USER-DEFINED PROTOCOL FORM SETTING

This only can be set by upper computer.

To facilitate user remote monitoring and reduce system communication bus pressure, address 3500-3999 is added to user-defined data mapping field. By configuring data address via upper computer, user can read data of user-defined sequence via address 3500-3999.

Table 43 – User-defined Protocol Form

Address	Item	Description	Bytes
3500	User-defined		2Bytes
3501	User-defined		2Bytes
3502	User-defined		2Bytes
3503	User-defined		2Bytes
3504	User-defined		2Bytes
3505	User-defined		2Bytes
3506	User-defined		2Bytes
3507	User-defined		2Bytes
3508	User-defined		2Bytes
3509	User-defined		2Bytes
3510	User-defined		2Bytes
3511	User-defined		2Bytes
3512	User-defined		2Bytes
3513	User-defined		2Bytes
3514	User-defined		2Bytes
3515	User-defined		2Bytes
3516	User-defined		2Bytes
3517	User-defined		2Bytes
3518	User-defined		2Bytes
3519	User-defined		2Bytes
3520	User-defined		2Bytes

Address	Item	Description	Bytes
3521	User-defined		2Bytes
3522-3999	User-defined		2*N

14.17 DIN16 SETTING

HPM6-PPU can expand with two DIN16 modules (input expansion module), which has the same input functions with HPM6.

Table 44 – DIN16 Parameter Settings

No.	Items	Range	Default	Description
Input Port 1				
1.	Contents Setting	(0-150)	0	Not Used.
2.	Active Type	(0-1)	0	0: Close Activate; 1: Open Activate.
Input Port 2				
3.	Contents Setting	(0-150)	0	Not Used.
4.	Active Type	(0-1)	0	0: Close Activate;1: Open Activate.
Input Port 3				
5.	Contents Setting	(0-150)	0	Not Used.
6.	Active Type	(0-1)	0	0: Close Activate;1: Open Activate.
Input Port 4				
7.	Contents Setting	(0-150)	0	Not Used.
8.	Active Type	(0-1)	0	0: Close Activate;1: Open Activate.
Input Port 5				
9.	Contents Setting	(0-150)	0	Not Used.
10.	Active Type	(0-1)	0	0: Close Activate;1: Open Activate.
Input Port 6				
11.	Contents Setting	(0-150)	0	Not Used.
12.	Active Type	(0-1)	0	0: Close Activate;1: Open Activate.
Input Port 7				
13.	Contents Setting	(0-150)	0	Not Used.
14.	Active Type	(0-1)	0	0: Close Activate;1: Open Activate.
Input Port 8				
15.	Contents Setting	(0-150)	0	Not Used.
16.	Active Type	(0-1)	0	0: Close Activate;1: Open Activate.
Input Port 9				

No.	Items	Range	Default	Description
17.	Contents Setting	(0-150)	0	Not Used.
18.	Active Type	(0-1)	0	0: Close Activate;1: Open Activate.
Input Port 10				
19.	Contents Setting	(0-150)	0	Not Used.
20.	Active Type	(0-1)	0	0: Close Activate;1: Open Activate.
Input Port 11				
21.	Contents Setting	(0-150)	0	Not Used.
22.	Active Type	(0-1)	0	0: Close Activate;1: Open Activate.
Input Port 12				
23.	Contents Setting	(0-150)	0	Not Used.
24.	Active Type	(0-1)	0	0: Close Activate;1: Open Activate.
Input Port 13				
25.	Contents Setting	(0-150)	0	Not Used.
26.	Active Type	(0-1)	0	0: Close Activate;1: Open Activate.
Input Port 14				
27.	Contents Setting	(0-150)	0	Not Used.
28.	Active Type	(0-1)	0	0: Close Activate;1: Open Activate.
Input Port 15				
29.	Contents Setting	(0-150)	0	Not Used.
30.	Active Type	(0-1)	0	0: Close Activate;1: Open Activate.
Input Port 16				
31.	Contents Setting	(0-150)	0	Not Used.
32.	Active Type	(0-1)	0	0: Close Activate;1: Open Activate.

NOTE: Input port functions please refer to Input Port Function setting.

14.18 DOUT16 SETTING

HPM6-PPU can expand with two DOUT16 modules (output expansion module), which has the same output functions with HPM6.

Table 45 – DOUT16 Parameter Settings

No.	Items	Parameter Range	Default	Description
Output Port 1				
1.	Contents Setting	Alarm/Function (0-255)	Alarm 000	Not Used.
2.	Active Type	(0-1)	0	0: Normally Open 1: Normally Close
Output Port 2				
3.	Contents Setting	Alarm/Function (0-255)	Alarm 000	Not Used.
4.	Active Type	(0-1)	0	0: Normally Open 1: Normally Close
Output Port 3				
5.	Contents Setting	Alarm/Function (0-255)	Alarm 000	Not Used.
6.	Active Type	(0-1)	0	0: Normally Open 1: Normally Close
Output Port 4				
7.	Contents Setting	Alarm/Function (0-255)	Alarm 000	Not Used.
8.	Active Type	(0-1)	0	0: Normally Open 1: Normally Close
Output Port 5				
9.	Contents Setting	Alarm/Function (0-255)	Alarm 000	Not Used.
10.	Active Type	(0-1)	0	0: Normally Open 1: Normally Close
Output Port 6				
11.	Contents Setting	Alarm/Function (0-255)	Alarm 000	Not Used.
12.	Active Type	(0-1)	0	0: Normally Open 1: Normally Close
Output Port 7				
13.	Contents Setting	Alarm/Function (0-255)	Alarm 000	Not Used.
14.	Active Type	(0-1)	0	0: Normally Open 1: Normally Close
Output Port 8				

No.	Items	Parameter Range	Default	Description
15.	Contents Setting	Alarm/Function (0-255)	Alarm 000	Not Used.
16.	Active Type	(0-1)	0	0: Normally Open 1: Normally Close
Output Port 9				
17.	Contents Setting	Alarm/Function (0-255)	Alarm 000	Not Used.
18.	Active Type	(0-1)	0	0: Normally Open 1: Normally Close
Output Port 10				
19.	Contents Setting	Alarm/Function (0-255)	Alarm 000	Not Used.
20.	Active Type	(0-1)	0	0: Normally Open 1: Normally Close
Output Port 11				
21.	Contents Setting	Alarm/Function (0-255)	Alarm 000	Not Used.
22.	Active Type	(0-1)	0	0: Normally Open 1: Normally Close
Output Port 12				
23.	Contents Setting	Alarm/Function (0-255)	Alarm 000	Not Used.
24.	Active Type	(0-1)	0	0: Normally Open 1: Normally Close
Output Port 13				
25.	Contents Setting	Alarm/Function (0-255)	Alarm 000	Not Used.
26.	Active Type	(0-1)	0	0: Normally Open 1: Normally Close
Output Port 14				
27.	Contents Setting	Alarm/Function (0-255)	Alarm 000	Not Used.
28.	Active Type	(0-1)	0	0: Normally Open 1: Normally Close
Output Port 15				
29.	Contents Setting	Alarm/Function (0-255)	Alarm 000	Not Used.
30.	Active Type	(0-1)	0	0: Normally Open 1: Normally Close
Output Port 16				
31.	Contents Setting	Alarm/Function (0-255)	Alarm 000	Not Used.

No.	Items	Parameter Range	Default	Description
32.	Active Type	(0-1)	0	0: Normally Open 1: Normally Close

NOTE: Output port functions please refer to Output Port Function list in 11.8.

14.19 USER-DEFINED PROTOCOL SETTING

This item can only be set by the upper computer.

In order to coordinate with address 3500-3999 to obtain user-defined data, user-defined bus data can be configured via upper computer and controller can share all ID genset defined data (100) via network bus. Then users can read each ID genset data via address 3500-3999 to configure user-defined data address.

Table 46 – User-defined Protocol

Address	Item	Description	Bytes
0	User-defined		2Bytes
1	User-defined		2Bytes
2	User-defined		2Bytes
3	User-defined		2Bytes
4	User-defined		2Bytes
5	User-defined		2Bytes
6	User-defined		2Bytes
7	User-defined		2Bytes
8	User-defined		2Bytes
9	User-defined		2Bytes
10	User-defined		2Bytes
11	User-defined		2Bytes
12	User-defined		2Bytes
13	User-defined		2Bytes
14	User-defined		2Bytes
15	User-defined		2Bytes
16	User-defined		2Bytes
17	User-defined		2Bytes
18	User-defined		2Bytes
19	User-defined		2Bytes
20	User-defined		2Bytes
21	User-defined		2Bytes
22-99	User-defined		2*N

15 COMMISSIONING

15.1 STEP 1: SINGLE UNIT DEBUGGING

a) Check the parameter configuration of the controller;
b) Check the genset connections and MSC CAN connection lines between the units. (E.g. if 3 generators are correctly connected, main screen will display Module Number: 3).
c) Start the genset in semi-auto mode, check if generator data is normal;
d) Start the genset in semi-auto mode, check if switch opens and closes normally;
e) Start the genset in semi-auto mode, after closing the breaker, check if generator frequency can be adjusted to the rated frequency (e.g. set the rated frequency as 52Hz/48Hz);
f) Start the genset in semi-auto mode, after closing the breaker, check if generator voltage can be adjusted to the rated voltage (e.g. set the rated voltage as 440V/360V);
g) Start the genset in semi-auto mode, after closing the breaker, check if power factor, active power and reactive power are normal; if abnormal, check generator voltage and current phase sequence, current transformer incoming line direction, current transformer secondary current dotted terminal.

15.2 STEP 2: SEMI-AUTO PARALLEL OPERATION OFF-LOAD

a) Semi-auto close parallel sets, check whether units synchronization is balanced and breaker close impulse current is too high; if that, adjust synchronization control parameters appropriately;
b) During parallel operation off load, check if there is no high circumfluence on HPM6 current screen;
c) During parallel operation off load, check if the output of active and reactive power is equal to zero; if it is not, then check if there is power oscillation; if there is, adjust the gain and stability values of engine, or adjust engine GOV or generator AVR gain and stability potentiometer to avoid active and reactive power oscillation; output close to 0; if relay adjusts speed/voltage, the droop function of speed adjusting panel and voltage adjusting panel should be opened and make droop characteristics be consistent.

15.3 STEP 3: SEMI-AUTO PARALLEL OPERATION ON-LOAD

a) Semi-auto close parallel sets, perform on-load test and check if active and reactive power is evenly distributed between all the gensets;
b) Semi-auto close parallel sets, perform soft on-load test to see if there is high overshoot or power oscillation during this period; if there is, adjust load slope properly;
c) Semi-auto close parallel sets, perform soft off-load test to see if genset breaker opens after reaching minimum set value (%);
d) Semi-auto close parallel sets, perform impact load test and damp load test to check if there is power oscillation.

16 INSTALLATION

Controller is split type design; HPM6D/HPM6D-PPU-RM display module is panel mounted and it is fixed by 4 clips when installed while HPM6-PPU master control module is fixed by M5×4 screw. The controller's overall dimensions and cutout dimensions are as following:

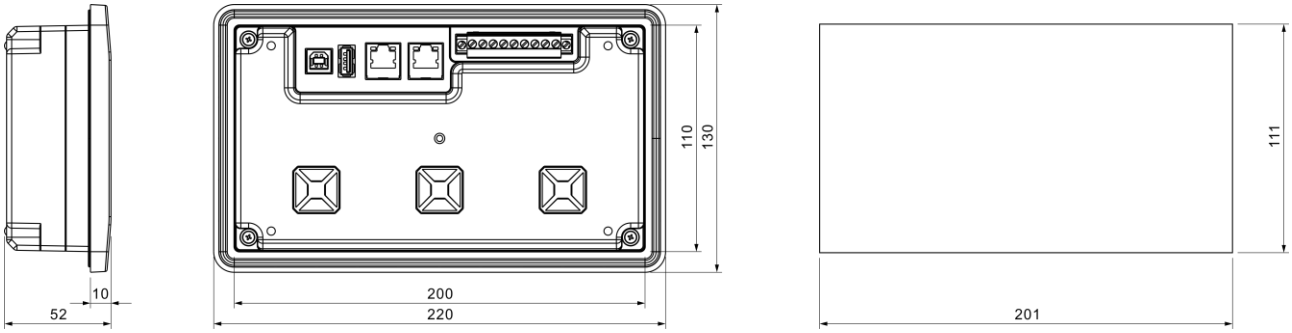

Fig.26 – HPM6D/HPM6D-PPU-RM Display Module Installation Dimensions (Unit: mm)

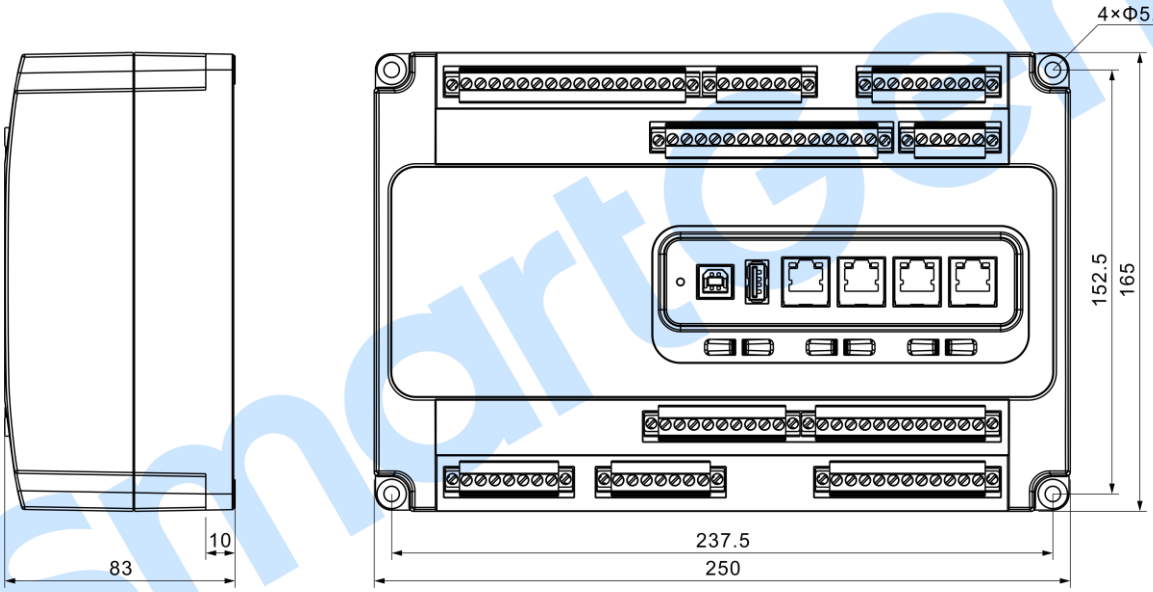

Fig.27 – HPM6-PPU Master Control Module Installation Dimensions (Unit: mm)

1) Battery Voltage Input

NOTE: HPM6-PPU controller can suit for widely range of battery voltage (8~35) VDC. The wire's diameter must be over 1.5mm^2 and which is connected to B+ and B- of controller power.

2) Output and Expand Relays

NOTE: Outputs of controller are divided into passive output and active output. If need to expand the relays, please add freewheel diode to both ends of expand relay's coils (when coils of relay have DC current) in order to prevent disturbance to controller or others equipment.

3) AC Input

NOTE: Current input of controller must be connected to outside current transformer. And the current transformer's secondary side current must be 5A. At the same time, the phases of current transformer and input voltage must be correct. Otherwise, the current of collecting and active power maybe not correct.

WARNING! When there is load current, transformer's secondary side is prohibited to open circuit.

4) Withstand Voltage Test

CAUTION! When controller has been installed in control panel, if need the high voltage test, please disconnect controller's all terminal connections, in order to prevent high voltage into controller and damage it.

SmartGen

17 FAULT FINDING

Table 47 – Fault Finding

Symptoms	Possible Solutions
Controller no response with power	Check power supply; Check controller connection wirings; Check DC fuse.
Controller GOV/AVR relay no response	Check whether GOV, AVR output is selected as internal relay output.
Controller GOV, AVR output error	Check setting of central point SW1 and range SW2; Check whether GOV, AVR output is selected as internal analog output.
Impact current too large in sync closing	Detect controller voltage sampling line or adjust synchronization parameters; Debug every unit based on the commissioning process.
Grid connected load of more than two units	Adjust load control parameters; Debug every unit based on the commissioning process.
Paralleling units cannot raise/drop power, or just can raise/drop power slightly	When the internal relay speed control, check whether the potentiometer is stuck or in limit, whether the speed control pulse width is too small at rated speed; When the internal analog speed control, SW1, SW2 set error, or adjust the speed control unit, EMC parameters.
Trip in running	Check related switch and its connections according to the information on LCD.
Genset is running while switch is not operating	Check if the output signal of the controller is matched with switch signal; Check the connections between switch and controllers.
MSC modules too few	Check whether MSC module number is correct; Detect if the MSC LINK communication is normal.
RS485 comm. abnormal	Check connections; Check setting of COM port is correct or not; Check RS485's connections of A and B is reverse connected or not; Check whether communication port of PC is normal.
Network monitoring comm.	Check connections; Check whether network IP, MAC address is correct.

SmartGen