SmartGen

MAKING CONTROL SMARTER

HGM8510

GENSET PARALLEL CONTROLLER

USER MANUAL

郑州众智科技股份有限公司
SMARTGEN(ZHENGZHOU)TECHNOLOGY CO.,LTD.

SmartGen Registered trademark
No. 28 Xuemei Street, Zhengzhou, Henan, China
Tel: +86-371-67988888/67981888/67992951
+86-371-67981000(overseas)
Fax: +86-371-67992952
Web: www.smartgen.com.cn/
www.smartgen.cn/
Email: sales@smartgen.cn

All rights reserved. No part of this publication maybe reproduced in any material form (including photocopying or storing in any medium by electronic means or other) without the written permission of the copyright holder.
SmartGen reserves the right to change the contents of this document without prior notice.

Table 1 Software Version

Date	Version	Note
2023-07-01	1.0	Original release.
2024-04-20	1.1	1. Update the setting range of synchronous calibration. 2. Update the descriptions of ground breaker.

SmartGen

This manual only suits for HGM8510 genset parallel controller.

Table 2 Symbol Instruction

Symbol	Instruction
NOTE	Highlights an essential element of a procedure to ensure correctness.
CAUTION	Indicates a procedure or practice, which, if not strictly observed, could result in damage or destruction of equipment.
WARNING	Indicates a procedure or practice, which could result in injury to personnel or loss of life if not followed correctly.

SmartGen

CONTENTS

1 OVERVIEW 6
2 PERFORMANCE AND CHARACTERISTICS 7
3 SPECIFICATION 9
4 OPERATION 12
4.1 FRONT PANEL 12
4.2 KEY FUNCTION DESCRIPTION 14
4.3 LCD DISPLAY 15
4.3.1 MAIN DISPLAY 15
4.3.2 USER MENU AND PARAMETER SETTING 16
4.4 AUTO START/STOP OPERATION 17
4.5 MANUAL START/STOP OPERATION 18
4.6 SWITCH CONTROL PROCEDURES 19
4.6.1 MANUAL CONTROL PROCEDURES 19
4.6.2 AUTOM CONTROL PROCEDURES 19
5 PROTECTIONS 19
5.1 CONTROLLER ALARM TYPES 19
5.2 WARNING ALARMS 20
5.3 BLOCK ALARMS 24
5.4 SAFETY TRIP ALARMS 27
5.5 SAFETY TRIP AND STOP ALARMS 29
5.6 TRIP ALARMS 33
5.7 TRIP AND STOP ALARM 36
5.8 SHUTDOWN ALARMS 40
6 WIRING CONNECTION 44
6.1 ILLUSTRATION 44
6.2 HGM8510D MODULE 44
6.2.1 TERMINAL DESCRIPTION 44
6.2.2 COMMUNICATION PORT 44
6.2.3 RS485 COMMUNICATION, RELAY OUTPUT, POWER PORTS 44
6.3 HGM8510M MODULE 45
6.3.1 TERMINAL DESCRIPTION 45
6.3.2 POWER & RELAY OUTPUT PORTS 45
6.3.3 COMMUNICATION PORT 49
7 SCOPES AND DEFINITIONS OF PROGRAMMABLE PARAMETERS 50
7.1 CONTENTS AND SCOPES OF PARAMETERS 50
7.2 DEFINED CONTENTS OF DIGITAL OUTPUT PORTS 77
7.2.1 DEFINED CONTENTS OF DIGITAL OUTPUT PORTS 77
7.2.2 DEFINED PERIOD OUTPUT 85
7.2.3 DEFINED COMBINATION OUTPUT 85
7.3 DEFINED CONTENTS OF DIGITAL INPUT PORTS 86

smartGen

7.4 SELECTION OF SENSORS 90
7.5 CONDITIONS OF CRANK DISCONNECT SELECTION 91
7.6 ECU PARAMETER DISPLAY SETTING 92
8 PARAMETERS SETTING 93
9 SENSOR SETTING 94
10 COMMISSIONING 95
10.1 STEP 1: SINGLE UNIT DEBUGGING 95
10.2 STEP 2: NO-LOAD MANUAL PARALLEL 95
10.3 STEP 3: ON-LOAD MANUAL PARALLEL 95
10.4 STEP 4: FULL AUTOMATIC PARALLEL 96
11 TYPICAL APPLICATION 97
12 POWER MANAGEMENT MODE 99
13 NEL TRIP DESCRIPTION 100
14 DUMMY LOAD CONNECTION 101
15 GROUND BREAKER CONTROL DESCRIPTION 102
16 PRIORITY RUNNING AND BALANCED RUNNING TIME DESCRIPTION 103
17 FUEL ECONOMY DESCRIPTION 104
18 STATIC PARALLEL DESCRIPTION 105
19 HC REQUEST 106
20 INSTALLATION 107
21 CONNECTIONS OF CONTROLLER AND J1939 ENGINE 109
21.1 CUMMINS ISB/ISBE 109
21.2 CUMMINS QSL9 109
21.3 CUMMINS QSM11 (IMPORT) 110
21.4 CUMMINS QSX15-CM570 110
21.5 CUMMINS GCS-MODBUS 110
21.6 CUMMINS QSM11 111
21.7 CUMMINS QSZ13 111
21.8 DETROIT DIESEL DDEC III/IV 112
21.9 DEUTZ EMR2 112
21.10 JOHN DEERE 112
21.11 MTU ADEC (SMART MODULE) 113
21.12 MTU ADEC (SAM MODULE) 113
21.13 PERKINS 113
21.14 SCANIA 114
21.15 VOLVO EDC3 114
21.16 VOLVO EDC4 115
21.17 VOLVO-EMS2 115
21.18 YUCHAI 116
21.19 WEICHAI 116
22 FAULT FINDING 117

SmartGen

1 OVERVIEW

HGM8510 controller is designed for gensets manual/auto parallel system with same or different capacities. Additionally, it is suitable for single unit constant power output and mains grid-connection to realize automatic start/stop, parallel running, data measurement, alarm protection as well as remote control, remote measurement and remote communication functions. It fits with large LCD display, optional Chinese, English and other languages interface, and it is reliable and easy to use.

HGM8510 controller has GOV and AVR control function, which can synchronize and share load automatically to parallel with gensets equipped with HGM8510 controller. Controller can precisely monitor all running status of gensets, and when abnormal occasions occur, gensets can parallel off from the bus and stop, in which process, LCD will display fault status. Controller has SAE J1939 port, and can communicate with various ECU (ENGINE CONTROL UNIT) with J1939.

HGM8510 controller has its own switch function, and controllers are connected by network bus communication with device-level ring-network redundancy function. It can handle complex applications due to its comprehensive fault protection function and flexible scheduled start/stop functions. It can be widely used in all types of automatic genset control system with compact structure, simple connections and high reliability.

SmartGen

2 PERFORMANCE AND CHARACTERISTICS

HGM8510 controller adopts split-type design, which consists of HGM8510D and HGM8510M. Main characteristics are as below:

- With 32-bit ARM SCM, high integration of hardware and more reliable;
- 4.3-inch LCD display with 480x272 resolution, optional interface (including English, Chinese);
- Improved LCD wear-resistance and scratch resistance due to hard screen acrylic;
- Silicon panel and pushbuttons for better operation in high/low temperature environment;
- RS485 communication port enables remote control, remote measuring, remote communication via MODBUS protocol;
- Fitted with CANBUS port and can connect with ECU equipped with J1939. It not only can monitor frequently-used data (such as water temperature, oil pressure, speed, fuel consumption and so on) of ECU, but also can control start, stop, raising speed and dropping speed;
- Suitable for 3-phase 4-wire, 3-phase 3-wire, single phase 2-wire, and 2-phase 3-wire systems with voltage 120/240V and frequency 50/60Hz;
- Collects and shows 3-phase voltage of Bus/Gen, Bus/Gen frequency, Gen 3-phase current, Gen power and Gen voltage harmonic parameters;
- For Bus, controller has loss of phase and reverse phase sequence detection functions; For Gen, controller has over voltage, under voltage, over frequency, under frequency, high unbalanced voltage, high total harmonic distortion, over current, earth fault, high unbalanced current, low power factor, over power, reverse power, loss of excitation, loss of phase, reverse phase sequence detection functions;
- Synchronous parameters: voltage difference between bus and gen, frequency difference between bus and gen, phase angle difference between bus and gen;
- Multiple running modes in auto state: on load running, off load running, demand parallel running;
- Ramp on and ramp off function in paralleling/splitting;
- 6 flexible analog sensor inputs can be set as sensors of temperature, pressure or level, 4 sensor inputs can be fixed as resistance type, 2 sensor inputs can be set as resistance, current or voltage type sensors;
- Oil pressure sensor and flexible sensor input 1 can directly connect with resistance/current/voltage sensors, while other sensor inputs can directly connect with resistance sensors, and for connecting voltage/current sensors, please make it clear before the order;
- More kinds of curves of temperature, oil pressure, fuel level sensors can be used directly and users can define the sensor curves by themselves;
- Precisely collect various engine parameters, including temperature, engine oil pressure, fuel level, speed, battery voltage, charger voltage, accumulated running time and accumulated start times etc.;
- Control and protection function: automatic start/stop of the diesel genset, breaker close/open and perfect 2-level fault indication and protection function etc.;

– Parameter setting function: parameters can be modified by users, and most of them can be adjusted from the front panel of the controller and all of them can be modified on PC by USB, RS485, RJ45 ports;

– Multiple crank disconnect conditions (speed, engine oil pressure, generator frequency) are optional;

– Wide power supply range DC(8~35)V, suitable for different starting battery voltage environment;

– With 999 pieces of event log, real-time clock, scheduled start & stop function (allowing to start the genset once a day/week/month with load or not);

– With black box record that allows to record the genset data of 5 alarms;

– Three data accumulation, two user data accumulation (user A and B), user can clear user data accumulation by themselves. three data accumulation is synchronized at the same time, but the data of user A and B can be cleared at any time;

– Heater, cooler and fuel pump control functions;

– Three maintenance function; maintenance time due actions can be set;

– All parameters apply digital adjustment, getting rid of conventional analog modulation with normal potentiometer, and improving genset reliability and stability;

– PLC programming function enables users to control logic according to demand;

– With custom protocol content function;

– With custom bus data function, which can read data of other genset controllers from one controller;

– With harmonic analysis and gen voltage, current waveform display function;

– The master control module has USB recording function; open USB record via PC software to do data analysis.

SmartGen

3 SPECIFICATION

Table 3 Technical Specification

Parameter	Details
Working Voltage	Range: DC8V - DC35V continuous, limit voltage DC80V, DC reverse connection protection Resolution: 0.1V Accuracy: 1%
Overall Consumption	Display: <4W (Standby mode: ≤2.5W) Master control: <11W (Standby mode: ≤7.0W)
AC Voltage	Phase voltage Range: AC15V - AC520V (ph-N) Resolution: 0.1V Accuracy: 0.5%
	Wire voltage Range: AC30V - AC900V (ph-ph) Resolution: 0.1V Accuracy: 0.5%
AC Frequency	Range: 5Hz - 75Hz Resolution: 0.01Hz Accuracy: 0.1Hz
AC Current	Rated: 5A Range: 0A - 10A Resolution: 0.1A Accuracy: 0.5%
Speed Sensor	Voltage Range: 1.0V - 24V (RMS) Frequency Range: 5Hz - 10,000Hz
Charger(D+) Voltage	Range: DC0V - DC60V continuous Resolution: 0.1V Accuracy: 1%
Analog Sensor	Resistor input Range: 0Ω - 6000Ω Resolution: 0.1 Accuracy: 1Ω (below 300Ω)
	Voltage input Range: 0V - 5V Resolution: 0.001V Accuracy: 0.5%
	Current input Range: 0mA - 20mA Resolution: 0.001mA Accuracy: 0.5%

SmartGen

Parameter	Details
Digital Output 1-2	16A DC30V active output (relay output)
Digital Output 3-5	8A DC30V active output (relay output)
Digital Output 6	8A DC30V volt-free output (relay output)
Digital Output 7-8	16A DC30V volt-free output (relay output)
Digital Output 9-20	1A DC30V power supply output (transistor output)
Digital Input 1-20	Low on threshold voltage is 4.8V, max voltage is 60V
RS485	Isolated, half-duplex, 9600 baud rate, max communication length 1000m
Ethernet	Self-adapting 10/100Mbit
CAN	Isolated, max communication length 250m; applying Belden 9841 cable or the equivalence
EMC/CE Certification	EN 61326-1:2013
Vibration Test	5Hz - 8Hz: ±17 mm 8Hz - 100Hz: 4G 100Hz - 500Hz: 2G IEC 60068-2-6
Shock Test	50g, 11ms, half-sine, complete shock test from three directions, and 18 times shock for each test IEC 60068-2-27
Bump Test	25G/16ms, half-sine IEC 60255-21-2
Safety Requirements	According to EN 61010-1 installation category (over voltage category) III, 300V, pollution class 2, altitude 3000m
Case Dimensions	HGM8510D: 220mm x 130mm x 50mm HGM8510M: 250mm x 165mm x 83mm
Panel Cutout	HGM8510D: 202mm x 112mm, embedded installation HGM8510M: aperture φ5.5 x 4, hole spacing 237.5mm x 152.5mm, screw installation
Working Temperature	(-25~+70)°C
Working Humidity	(20~93)%RH
Storage Temperature	(-30~+80)°C
Protection Level	HGM8510D: Front enclosure: IP65 when waterproofing rubber ring is installed between the controller and the control panel Rear enclosure: IP20 HGM8510M: IP20
Insulation Intensity	Apply AC2.2kV voltage between high voltage terminal and low voltage terminal and the leakage current is not more than 3mA within 1min.
Meeting Standard	GB/T 2820.4-2009 Reciprocating internal combustion engine driven alternating current generating sets Part 4: Controlgear and switchgear GB/T 10250-2007 Electrical and Electronic Installations in Ships-Electromagnetic Compatibility GD 22-2015 Guidelines for Type Approval Test of Electric and

Parameter	Details
	Electronic Products E-14-2015 Generator Protection Device and Automatic Power Station Control Device
Weight	HGM8510D: 0.58kg HGM8510M: 1.37kg

SmartGen

4 OPERATION

4.1 FRONT PANEL

The LCD of HGM8510D is 4.3-inch TFT with resolution of 480*272; the panel drawing is shown as following:

Fig.1 HGM8510D Front Panel Indication

Table 4 Alarm Indicator

Alarm Type	Indicator Color	Indicator Status
No Alarm		Extinguishing
Warning	Yellow	Slow flashing (1 time per second)
Block	Yellow	Slow flashing (1 time per second)
Safety Trip	Red	Fast flashing (2 times per second)
Safety Trip and Stop	Red	Fast flashing (2 times per second)
Trip	Red	Fast flashing (2 times per second)
Trip and Stop	Red	Fast flashing (2 times per second)
Shutdown	Red	Fast flashing (2 times per second)

NOTE1: Alarm indicator (red/green/yellow): flashing in alarm not muted, always illuminating in alarm mute but not disappear, extinguishing in alarm disappeared.

NOTE2: Status indicator (red/green, yellow represents that green and red lights are illuminated simultaneously).

Green light always illuminating: genset normal running or high speed cooling.

Green light flashing: genset starting/stopping.

Red light always illuminating: genset has block and above alarms, affecting start or close.

Yellow light always illuminating: genset normal running or high speed cooling, but there is block and above alarms, affecting start or close.

Light extinguishing: genset in standby and can start normally.

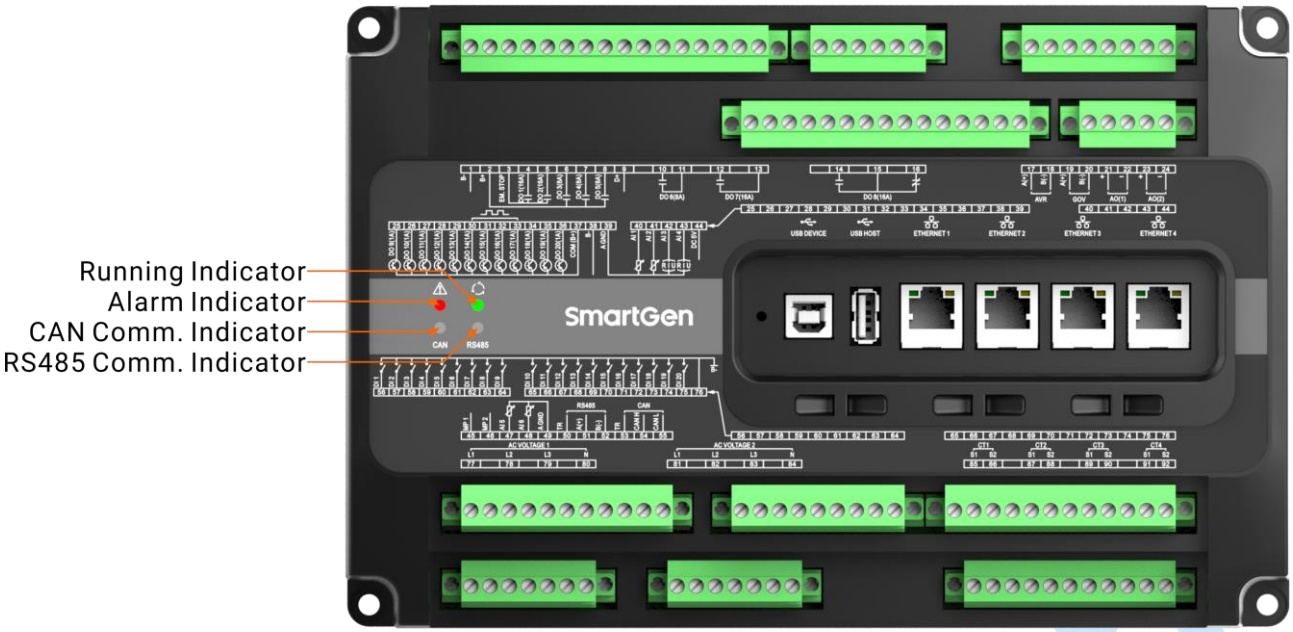

Fig.2 HGM8510M Panel

NOTE1: Running indicator (red/green, yellow represents that green and red lights are illuminated simultaneously), refer to indicator description of display module.

NOTE2: Alarm indicator (red/green/yellow): refer to indicator description of display module.

NOTE3: CAN communication indicator (green): flashing in communication, extinguishing in other status.

NOTE4: RS485 communication indicator (green): flashing in communication, extinguishing in other status.

SmartGen

4.2 KEY FUNCTION DESCRIPTION

Table 5 Key Function Description

Icon	Key	Description
	Close	Close the breaker in Manual mode.
	Open	Open the breaker in Manual mode.
	Lamp Test	Hold and press it more than 1s to test indicator and LCD.
	Test	Press it to enter Test mode.
	Auto	Press it to enter Auto mode.
	Manual	Press it to enter Manual mode.
	Mute/Alarm Reset	Remove the alarm sound; Reset the alarm by pressing it for over 3s.
Fn	Function	Shortcut key by making groups with other keys; or other function key (start, stop, etc.).
	Stop	Stop the running genset in Auto/Manual mode; Reset alarm in Stop mode; Lamp test (press it for over 3s); During stopping process, press it again to stop the genset immediately.
	Start	Start the genset in Manual or Test mode.
	Up/Increase	1) Screen scroll; 2) Move up the cursor and increase value in setting menu.
	Down/Decrease	1) Screen scroll; 2) Move down the cursor and decrease value in setting menu.
	Left	1) Page scroll; 2) Left move the cursor in setting menu.
	Right	1) Page scroll; 2) Right move the cursor in setting menu.
	Set/Confirm	1) Enter setting screen; 2) Enter next menu or confirm configuration in setting menu.
	Exit	1) Return to first screen; 2) Return to previous menu in setting menu.

SmartGen

NOTE: Press and simultaneously in manual mode and it can force the generator to crank. At this time the controller shall not judge whether the genset start is successful or not according to the starting conditions. The operator controls it. When operator observes that the genset has started, he/she should release the key and the start output will deactivate. Safety on delay will be initiated.

NOTE: Regarding ECU genset, in Stop/Auto mode, press and it shall power on the ECU (fuel output and ECU power output are active.).

CAUTION! Factory default password is "00318", and operator can change it in case others change the advanced parameter settings. Please clearly remember the password after changing. If you forget it, please contact SmartGen services and send the PD information in the "**ABOUT**" page to the service personnel.

4.3 LCD DISPLAY

4.3.1 MAIN DISPLAY

Paging is applied for the main display; is used for page scroll and for screen scroll.

Homepage includes the following contents:

Gen: active power, reactive power, voltage, frequency;

Bus/load: voltage, frequency;

Engine: load percentage, speed, temperature, battery voltage, fuel level, oil pressure;

Part of status display.

Status page includes the following contents:

Genset status and ATS status.

Multi-set page includes the following contents:

All gensets data and ATS status.

Engine page includes the following contents:

Speed, flexible sensor 1-6, battery voltage, charger voltage, accumulated running time, accumulated start times.

NOTE: If CAN BUS is connected to read engine information from J1939, this page also includes coolant pressure, coolant level, fuel temperature, fuel pressure, inlet temperature, exhaust temperature, turbo pressure, fuel consumption, total fuel consumption and so on. (Different engines have different parameters.)

Generator page includes the following contents:

Phase voltage, wire voltage, frequency, phase sequence, current, active power of different phases, total active power and percentage, reactive power of different phases, total reactive power and percentage, apparent power of different phases, total apparent power, power factor of different phases, average power factor, accumulated electric energy, total power of multi-set; ground current and percentage, unbalanced current and percentage, unbalanced voltage and percentage, voltage harmonic parameter.

NOTE:

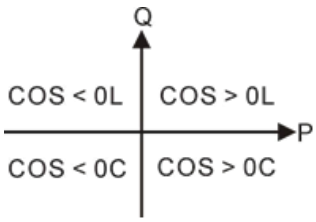

Fig.3 Power Factor Display

NOTE:

P stands for active power;

Q stands for reactive power.

Table 6 Power Factor Display Description

Power Factor	Conditions	Active Power	Reactive Power	Remark
COS>0L	P>0, Q>0	Input	Input	Load is resistive induction.
COS>0C	P>0, Q<0	Input	Output	Load is resistive capacitance.
COS<0L	P<0, Q>0	Output	Input	Load equals an under excitation generator.
COS<0C	P<0, Q<0	Output	Output	Load equals an over excitation generator.

NOTES:

1. Input active power, and genset supplies electricity to load.
2. Output active power, and load supplies electricity to genset.
3. Input reactive power, and genset sends reactive power to load.
4. Output reactive power, and load sends reactive power to genset.

Bus page includes the following contents:

Phase voltage, wire voltage, frequency, phase sequence, available power.

Sync. page includes the following contents:

Voltage difference, frequency difference, phase difference, active power output and target percentage, reactive power output and target percentage, GOV voltage output percentage, AVR voltage output percentage and MSC status.

Alarm page:

Current alarm information.

NOTE: For ECU warnings and shutdown alarms, if the alarm details are displayed, check the engine according to it. Otherwise, please check the engine manual according to SPN alarm code.

Event log page:

Make records about all start/stop events (alarm events except warnings, manual start/stop events) and the time when events occur.

Others page includes the following contents:

Time and date, maintenance countdown (if configured), input/output port status, communication indication and Ethernet configuration (if configured).

About page includes the following contents:

Release software version, hardware version, and product PD number.

4.3.2 USER MENU AND PARAMETER SETTING

Press key for more than 1s and it enters user menu.

- Parameter Setting

After inputting the correct password (factory default password is 00318), you can enter the parameter setting screen.

- Language

Optional Simplified Chinese, English.

- Clear users' accumulation

It can clear accumulated running time A and B, accumulated electric energy A and B.

4.4 AUTO START/STOP OPERATION

Press the and the indicator beside it is illuminated, which means the genset is at Auto Start Mode.

Automatic Start Sequence:

1) When remote start (on-load) is active, “start delay” timer is initiated;
2) “Start Delay” countdown will be displayed on genset status page;
3) When start delay is over, preheating relay is energized (if configured), “preheat delay XX s” information will be displayed on genset status page;
4) After the above delay, the fuel relay is energized, and then one second later, the starting relay is engaged. During the “start time”, if the genset does not start, then fuel relay and starting relay stops outputting, and enter “crank rest time”, waiting for next crank;
5) Should the start beyond the set attempts, the controller issues “start failure” and stops the genset and at the same time alarm page on LCD displays “start failure alarm”;
6) If it starts successfully during the attempts, it enters “safety on time”, and during this period low oil pressure, high water temperature, under speed and charge alternator failure alarms are all inactive; After “safety on time”, it enters “start idle delay” (if configured);
7) During “start idle delay”, under speed, under frequency, under voltage alarms are prohibited. When this delay is over, “warming up delay” is initiated (if configured);
8) When single genset is running and “warming up delay” is over, if generator status is normal, its indicator will be illuminated. If generator voltage and frequency have reached on-load requirements, then the generator close relay will be energized; the genset will take load and generator power indicator will be illuminated, and generator will enter normal running status. If voltage or frequency is abnormal, the controller will initiate alarm (alarm information will be displayed on LCD);
9) When the genset is running in parallel and warming up delay is over:
   a) If bus has no voltage signal, then the controller will issue a close status signal to other gensets waiting for parallel. Then generator close relay will output, avoiding to close the breaker at the same time;
   b) If bus has voltage or other gensets are already closed, the controller will adjust speed and voltage through GOV and AVR to synchronize the gensets to the bus; when synchronization requirements have been achieved, breaker close signal will be initiated and the genset will be paralleled with the bus. Once they are paralleled, the controller will control the engine to adjust the throttle and share load with other paralleled gensets.

NOTE: When remote start is applied to start (off load), the procedure is same as the above. However, generator close relay is deactivated, genset is off load. When remote start (on demand) is applied to start, the genset will start based on the set priority, and then synchronize, put them in parallel and share the load in the bus automatically.

Automatic Stop Sequence:

1) When the remote start signal is removed, the “stop delay” is initiated;
2) Once this “stop delay” has expired, the controller will ramp the load from the genset to other sets and issue breaker open signal. The “cooling delay” is then initiated. During this time if the remote start signal is active again, then the controller enters paralleled status again; When “cooling delay” is over, the genset enters “stop idle delay”;
3) During “stop idle delay” (if configured), the idle relay is energized;

4) "ETS solenoid hold" begins, ETS relay is energized while fuel relay is de-energized, and complete stop is detected automatically;

5) "Fail to stop delay" begins, and complete stop is detected automatically;

6) When generator stops completely, "after stop delay" will be initiated. Otherwise, "fail to stop" alarm is initiated and the corresponding alarm information is displayed on LCD. (If generator stops successfully after "fail to stop" alarm has initiated, "after stop delay" will be initiated and the alarm will be removed.);

7) Generator is placed into its standby mode after "after stop delay".

4.5 MANUAL START/STOP OPERATION

1) MANUAL START: Manual mode is selected by pressing the ; a LED beside it will be illuminated to confirm the operation; then press I to start the genset; it can detect crank disconnect condition and generator accelerates to high-speed running automatically. With high temperature, low oil pressure, over speed and abnormal voltage during generator running, controller can protect genset to stop quickly (please refer to No.3~9 of **Automatic Start Sequence** for detailed procedures).

2) MANUAL STOP: Press O and it can shut down the running gensets. (Please refer to No.2~7 of **Automatic Start Sequence** for detailed procedures).

NOTE: In "manual mode", for the procedures of ATS please refer to **Switch Control Procedures** of genset in this manual.

SmartGen

4.6 SWITCH CONTROL PROCEDURES

4.6.1 MANUAL CONTROL PROCEDURES

When controller is in **Manual** mode, the switch control procedures will start through manual transfer procedures. Users can control close/open via pressing corresponding keys.

Breaker Close Operation: During genset normal running, press if generator voltage and frequency have reached on-load requirements.

1) When single genset is running, generator closing relay outputs;
2) When gensets are running in parallel,
   a) If bus has no voltage signal, then the controller will issue a close status signal to other gensets waiting for parallel. Then generator close relay will output, avoiding to close the breaker at the same time;
   b) If bus has voltage or other gensets are already closed, the controller will adjust speed and voltage through GOV and AVR to synchronize the gensets to the bus; when synchronization requirements have been achieved, breaker close signal will be initiated and the genset will be paralleled with the bus. Once they are paralleled, the controller will control the generator to adjust the throttle and share load with other paralleled gensets.

Breaker Open Operation: Press,

1) When single genset is running, the controller sends open breaker signal.
2) When gensets are running in parallel, the controller shall transfer the load to other gensets and then issue open signal.

4.6.2 AUTOMATIC CONTROL PROCEDURES

When controller is in Auto mode, the switch is automatically controlled.
Switch control procedure refer to Automatic Start/Stop Control.

NOTE: The auxiliary close input must be configured and make sure the connection is correct.

5 PROTECTIONS

5.1 CONTROLLER ALARM TYPES

Table 7 Controller Alarm Types

Alarm Type/Action	Open Breaker Directly	Open Breaker After Unloading	Stop Directly	Cooling Stop	Reset Alarm
Warning	-	-	-	-	Auto
Block	-	-	-	-	Manual
Safety Trip	-	●	-	-	Manual
Safety Trip and Stop	-	●	-	●	Manual
Trip	●	-	-	-	Manual
Trip and Stop	●	-	-	●	Manual
Alarm Shutdown	●	-	●	-	Manual

5.2 WARNING ALARMS

When controller detects the warning alarm, it only issues warning, and the genset does not open and stop. When the warning signal disappears, it is removed automatically.

Table 8 Warning Alarms

No	Type	Description
1	Over Speed	When this is enabled, and the controller detects that the genset speed is above the pre-set limit, it will initiate an alarm signal. It is always detected.
2	Under Speed	When this is enabled and the controller detects that the genset speed is below the pre-set limit, it will initiate an alarm signal. It is detected after “warming up” and before “stop idle”.
3	Loss of Speed Signal	When the controller detects the genset speed is 0, it shall initiate an alarm signal. It is detected after “safety on time” before “ETS solenoid hold”.
4	Gen Over Frequency	When this is enabled, and the controller detects the frequency is above the preset limit, it shall initiate an alarm signal. It is always detected.
5	Gen Under Frequency	When this is enabled, and the controller detects the frequency is below the preset limit, it shall initiate an alarm signal. It is detected after “warming up” before “stop idle”.
6	Gen Over Voltage	When this is enabled, and the controller detects the voltage is above the preset limit, it shall initiate an alarm signal. It is always detected.
7	Gen Under Voltage	When this is enabled, and the controller detects the voltage is below the preset limit, it shall initiate an alarm signal. It is detected after “warming up” before “stop idle”.
8	Gen Over Current	When this is enabled, and the controller detects the current is above the preset limit, it shall initiate an alarm signal. It is always detected.
9	Unbalanced Current	When this is enabled, and the controller detects the value is above the preset limit, it shall initiate an alarm signal. It is always detected.
10	Ground Fault	When this is enabled, and the controller detects the earth current is above the preset limit, it shall initiate an alarm signal. It is always detected.
11	Reverse Power	When this is enabled, and the controller detects the reverse power (negative) is above the preset limit, it shall initiate an alarm signal. It is always detected.
12	Over Power	When this is enabled, and the controller detects the genset power (positive) is above the preset limit, it shall initiate an alarm signal. It is always detected.
13	Loss of Excitation Fault	When this is enabled, and the controller detects the genset reactive

No	Type	Description
		power (negative) is above the preset limit, it shall initiate an alarm signal. It is always detected.
14	ECU Alarm	When the controller receives the engine alarm signal from J1939, it shall initiate an alarm signal. It is always detected.
15	Flex. Sensor Open	When the controller detects the sensor circuit is open, it shall initiate an alarm signal. It is always detected.
16	Flex. Sensor High	When this is enabled, and the controller detects the sensor value is above the preset limit, it shall initiate an alarm signal. It is detected after "safety on time" before "ETS solenoid hold" when the sensor is selected as temperature sensor and pressure sensor; It is always detected when the sensor is selected as fuel level sensor.
17	Flex. Sensor Low	When this is enabled, and the controller detects the sensor value is below the preset limit, it shall initiate an alarm signal. It is detected after "safety on time" before "ETS solenoid hold" when the sensor is selected as temperature sensor and pressure sensor; It is always detected when the sensor is selected as fuel level sensor.
18	Flex. Sensor Error	When voltage or current input is selected for the curve type of the controller, and the controller detects input signal is abnormal, it shall initiate an alarm signal, and meanwhile the curve is transferred to resistor type to prevent damaging the controller. It is always detected.
19	Fail to Stop	After "fail to stop delay" is over, if the engine does not stop completely, it will initiate an alarm signal.
20	Charge Alternator Failure	When this is enabled and the controller detects that charger voltage is below the pre-set limit, it will initiate an alarm signal. It is detected when the genset is normally running.
21	Battery Over Voltage	When this is enabled, and the controller detects the battery voltage is above the preset limit, it shall issue an alarm signal. It is always detected.
22	Battery Under Voltage	When this is enabled, and the controller detects the battery voltage is below the preset limit, it shall issue an alarm signal. It is always detected.
23	Fail to Sync.	If the controller does not detect sync. signal within the pre-set time, it will initiate an alarm signal. It is detected when breaker closes.
24	GOV Reach Limit	When the controller's GOV output reaches the upper limit or lower limit, it will initiate an alarm signal. It is detected when the genset is normally running.
25	AVR Reach Limit	When the controller's AVR output reaches the upper limit or lower limit, it will initiate an alarm signal.

No	Type	Description
		It is detected when the genset is normally running.
26	Gen Breaker Alarm	When "Gen Closed Aux" is not set for the controller input port, the controller will initiate an alarm signal. It is always detected.
27	Mains Over Freq.	When the controller detects that the mains frequency is above the pre-set value, it will initiate an alarm signal. It is detected after "Mains Parallel Mode" is active and after "Gen Closed".
28	Mains Under Freq.	When the controller detects the mains frequency has fallen below the pre-set value, it will initiate an alarm signal. It is detected after "Mains Parallel Mode" is active and after "Gen Closed".
29	Mains Over Voltage	When the controller detects that the mains voltage has exceeded the pre-set value, it will initiate an alarm signal. It is detected after "Mains Parallel Mode" is active and after "Gen Closed".
30	Mains Under Voltage	When the controller detects that the mains voltage has fallen below the pre-set value, it will initiate an alarm signal. It is detected after "Mains Parallel Mode" is active and after "Gen Closed".
31	Mains ROCOF	When the controller detects mains ROCOF is above the pre-set value, it will initiate an alarm signal. It is detected after "Mains Parallel Mode" is active and after "Gen Closed".
32	Mains Vector Shift	When the controller detects mains voltage vector shift is above the pre-set value, it will initiate an alarm signal. It is detected after "Mains Parallel Mode" is active and after "Gen Closed".
33	Freq. Error Too High	When the controller detects the difference of generator frequency and busbar frequency is above 8Hz, it will initiate an alarm signal. It is detected during synchronous close.
34	Few MSC Sets	When the controller detects the number of the parallel gensets is less than the set minimum parallel number, it will initiate an alarm signal. There are 2 possible reasons: a) the communication wire between the controllers is detached, leading to communication interrupt. b) controller of parallel gensets is not powered on. It is always detected.
35	Maintenance Time Due	When this is enabled and countdown time is 0, it will initiate an alarm signal. It is detected when the genset is running.
36	MSC Comm. Failure	When the controller detects there is data loss of other gensets in MSC bus, it will initiate an alarm signal. It is always detected.

No	Type	Description
37	Digital Input Alarm	When the digital input port is set users-defined and if it is active, the controller will initiate an alarm signal for the input port. It is detected in the detection range set for the input port.
38	PLC Function Alarm	When PLC function is set users-defined and if it is active, the controller will initiate an alarm signal. It is detected in the detection range set by the PLC function.
39	DIN16 Comm. Failure	When DIN16 is enabled and the controller cannot receive its communication data, it will initiate an alarm signal. It is always detected.
40	DIN16 Input Alarm	When DIN16 input is set users-defined and if it is active, the controller will initiate an alarm signal. It is detected in the detection range set in the input.
41	DOUT16 Comm. Failure	When DOUT16 is enabled and the controller cannot receive its communication data, it will initiate an alarm signal. It is always detected.
42	AIN8 Comm. Failure	When AIN8 is enabled and the controller cannot receive its communication data, it will initiate an alarm signal. It is always detected.
43	AIN24 1 Comm. Failure	When AIN24 1 is enabled and the controller cannot receive its communication data, it will initiate an alarm signal. It is always detected.
44	AIN24 2 Comm. Failure	When AIN24 2 is enabled and the controller cannot receive its communication data, it will initiate an alarm signal. It is always detected.
45	Power Factor Low	When this is enabled and the controller detects that the generator power factor has fallen below the pre-set value, it will initiate an alarm signal. It is always detected.
46	THD High	When this is enabled and the controller detects that the THD has exceeded the pre-set value, it will initiate an alarm signal. It is always detected.
47	Gen Volt Unbalance	When this is enabled and the controller detects that the unbalanced voltage value has exceeded the pre-set value, it will initiate an alarm signal. It is always detected.
48	Ground Relay Close Failure	When controller detects that ground relay close failure, that is, breaker close input is inactive after ground relay close outputs, and then it will initiate an alarm signal. It is detected when ground relay is closing.
49	Ground Relay Open Failure	When controller detects that ground relay open failure, that is, breaker open input is inactive after ground relay open outputs, and then it will initiate an alarm signal. It is detected when ground relay is opening.

SmartGen

5.3 BLOCK ALARMS

When the controller detects block signals, it only issues warning and the genset does not shut down and open. Users need to reset alarms manually.

Table 9 Block Alarms

No	Type	Description
1	Over Speed	When this is enabled, and the controller detects that the genset speed is above the pre-set limit, it will initiate an alarm signal. It is always detected.
2	Under Speed	When this is enabled and the controller detects that the genset speed is below the pre-set limit, it will initiate an alarm signal. It is detected after “warming up” and before “stop idle”.
3	Loss of Speed Signal	When the controller detects the genset speed is 0, it shall issue an alarm signal. It is detected after “safety on time” before “ETS solenoid hold”.
4	Gen Over Frequency	When this is enabled, and the controller detects the genset frequency is above preset limit, it shall issue an alarm signal. It is always detected.
5	Gen Under Frequency	When this is enabled, and the controller detects the frequency is below the preset limit, it shall issue an alarm signal. It is detected after “warming up” and before “stop idle”.
6	Gen Over Voltage	When this is enabled, and the controller detects the genset voltage is above preset limit, it shall issue an alarm signal. It is always detected.
7	Gen Under Voltage	When this is enabled, and the controller detects the voltage is below the preset limit, it shall issue an alarm signal. It is detected after “warming up” and before “stop idle”.
8	Gen Over Current	When this is enabled, and the controller detects the genset current is above preset limit, it shall issue an alarm signal. It is always detected.
9	Unbalanced Current	When this is enabled, and the controller detects the unbalanced current is above preset limit, it shall issue an alarm signal. It is always detected.
10	Ground Fault	When this is enabled, and the controller detects the ground current is above the preset limit, it shall issue an alarm signal. It is always detected.
11	Reverse Power	When this is enabled, and the controller detects the reverse power (negative) is above the preset limit, it shall issue an alarm signal. It is always detected.
12	Over Power	When this is enabled, and the controller detects the genset power (positive) is above the preset limit, it shall issue an alarm signal. It is always detected.
13	Loss of Excitation Fault	When this is enabled, and the controller detects the genset reactive

No	Type	Description
		power (negative) is above the preset limit, it shall issue an alarm signal. It is always detected.
14	ECU Alarm	When the controller receives the engine alarm signal from J1939, it shall issue an alarm signal. It is always detected.
15	Flex. Sensor Open	When the controller detects the sensor is open, it shall issue an alarm signal. It is always detected.
16	Flex. Sensor High	When over high block alarm is enabled, and the controller detects the sensor value is above the preset upper limit, it shall issue an alarm signal. It is detected after "safety on time" before "ETS solenoid hold" when the sensor is selected as temperature sensor and pressure sensor; It is always detected when the sensor is selected as fuel level sensor.
17	Flex. Sensor Low	When over low block alarm is enabled, and the controller detects the sensor value is below the preset low limit, it shall issue an alarm signal. It is detected after "safety on time" before "ETS solenoid hold" when the sensor is selected as temperature sensor and pressure sensor; It is always detected when the sensor is selected as fuel level sensor.
18	Flex. Sensor Error	When voltage or current input is selected for the curve type of the controller, and the controller detects input signal is abnormal, it shall issue an alarm signal, and meanwhile the curve is transferred to resistor type to prevent damaging the controller. It is always detected.
19	Charge Alternator Failure	When this is enabled, and the controller detects the charger voltage value is below the preset limit, it shall issue an alarm signal. It is detected when the genset is normally running.
20	Battery Over Voltage	When this is enabled, and the controller detects the battery voltage is above the preset limit, it shall issue an alarm signal. It is always detected.
21	Battery Under Voltage	When this is enabled, and the controller detects the battery voltage is below the preset limit, it shall issue an alarm signal. It is always detected.
22	Fail to Sync.	If the controller does not detect sync. signal within the pre-set time, it will initiate an alarm signal. It is detected when breaker closes.
23	Few MSC Sets	When the controller detects the number of the paralleled gensets is less than the set minimum paralleled number, it will initiate an alarm signal. There are 2 possible reasons: a) the communication wire between the controllers is detached, leading to communication interrupt. b) the controller of paralleled gensets is not powered on. It is always detected.
24	Maintenance Time Due	When this is enabled and countdown time is 0, it will initiate an alarm

No	Type	Description
		signal. It is detected when the genset is running.
25	Digital Input Alarm	When the digital input port is set users-defined and if it is active, the controller will initiate an alarm signal for the input port. It is detected in the detection range set for the input port.
26	PLC Function Alarm	When PLC function is set users-defined and if it is active, the controller will initiate an alarm signal. It is detected in the detection range set by the PLC function.
27	Power Factor Low	When this is enabled and the controller detects that the generator power factor has fallen below the pre-set limit, it will initiate an alarm signal. It is always detected.
28	THD High	When this is enabled and the controller detects that the THD has exceeded the pre-set limit, it will initiate an alarm signal. It is always detected.
29	Gen Volt Unbalance	When this is enabled and the controller detects that the voltage unbalanced value has exceeded the pre-set limit, it will initiate an alarm signal. It is always detected.
30	Ground Relay Close Failure	When controller detects that ground relay close failure, that is, breaker close input is inactive after ground relay close outputs, and then it will initiate an alarm signal. It is detected when ground relay is closing.
31	Ground Relay Open Failure	When controller detects that ground relay open failure, that is, breaker open input is inactive after ground relay open outputs, and then it will initiate an alarm signal. It is detected when ground relay is opening.
32	Switch Fault	When the controller detects the internal switch fails, it will initiate an alarm signal.
33	IP Error	When controller detects that there is same IP on the MSC network bus, it will initiate an alarm signal. It is always detected.
34	Ring Network Disconnect	When controller detects that ring network is disconnected, it will initiate an alarm signal. It is always detected.

SmartGen

5.4 SAFETY TRIP ALARMS

When controller detects safety trip signals, it will open breaker after soft unloading but not stop the genset. Users need to reset alarms manually.

Table 10 Safety Trip Alarms

No	Type	Description
1	Over Speed	When this is enabled, and the controller detects that the genset speed is above the pre-set limit, it will initiate an alarm signal. It is always detected.
2	Under Speed	When this is enabled and the controller detects that the genset speed is below the pre-set limit, it will initiate an alarm signal. It is detected after “warming up” and before “stop idle”.
3	Loss of Speed Signal	When the controller detects the genset speed is 0, it will initiate an alarm signal. It is detected after “safety on time” before “ETS solenoid hold”.
4	Gen Over Frequency	When this is enabled, and the controller detects the genset frequency is above preset limit, it will initiate an alarm signal. It is always detected.
5	Gen Under Frequency	When this is enabled, and the controller detects the frequency is below the preset limit, it will initiate an alarm signal. It is detected after “warming up” and before “stop idle”.
6	Gen Over Voltage	When this is enabled, and the controller detects the genset voltage is above preset limit, it will initiate an alarm signal. It is always detected.
7	Gen Under Voltage	When this is enabled, and the controller detects the voltage is below the preset limit, it will initiate an alarm signal. It is detected after “warming up” and before “stop idle”.
8	Gen Over Current	When this is enabled, and the controller detects the genset current is above preset limit, it will initiate an alarm signal. It is always detected.
9	Unbalanced Current	When this is enabled, and the controller detects the unbalanced current is above preset limit, it will initiate an alarm signal. It is always detected.
10	Ground Fault	When this is enabled, and the controller detects the ground current is above the preset limit, it will initiate an alarm signal. It is always detected.
11	Reverse Power	When this is enabled, and the controller detects the reverse power (negative) is above the preset limit, it will initiate an alarm signal. It is always detected.
12	Over Power	When this is enabled, and the controller detects the genset power (positive) is above the preset limit, it will initiate an alarm signal. It is always detected.
13	Loss of Excitation Fault	When this is enabled, and the controller detects the genset reactive

No	Type	Description
		power (negative) is above the preset limit, it will initiate an alarm signal. It is always detected.
14	ECU Alarm	When the controller receives the engine alarm signal from J1939, it will initiate an alarm signal. It is always detected.
15	Flex. Sensor Open	When the controller detects the sensor circuit is open, it will initiate an alarm signal. It is always detected.
16	Flex. Sensor High	When over high alarm is enabled, and the controller detects the sensor value is above the preset upper limit, it will initiate an alarm signal. It is detected after "safety on time" before "ETS solenoid hold" when the sensor is selected as temperature sensor and pressure sensor; It is always detected when the sensor is selected as fuel level sensor.
17	Flex. Sensor Low	When over low alarm is enabled, and the controller detects the sensor value is below the preset low limit, it will initiate an alarm signal. It is detected after "safety on time" before "ETS solenoid hold" when the sensor is selected as temperature sensor and pressure sensor; It is always detected when the sensor is selected as fuel level sensor.
18	Flex. Sensor Error	When voltage or current input is selected for the curve type of the controller, and the controller detects input signal is abnormal, it will initiate an alarm signal, and meanwhile the curve is transferred to resistor type to prevent damaging the controller. It is always detected.
19	Charge Alternator Failure	When this is enabled, and the controller detects the charger voltage value is below the preset limit, it will initiate an alarm signal. It is detected when the genset is normally running.
20	Battery Over Voltage	When this is enabled, and the controller detects the battery voltage is above the preset limit, it will initiate an alarm signal. It is always detected.
21	Battery Under Voltage	When this is enabled, and the controller detects the battery voltage is below the preset limit, it will initiate an alarm signal. It is always detected.
22	Fail to Sync.	If the controller does not detect sync. signal within the pre-set time, it will initiate an alarm signal. It is detected when breaker closes.
23	Few MSC Sets	When the controller detects the number of the paralleled gensets is smaller than the set minimum paralleled number, it will initiate an alarm signal. There are 2 possible reasons: a) the communication wire between the controllers is detached, leading to communication interrupt. b) the controller of paralleled gen-sets is not powered on. It is always detected.
24	Maintenance Time Due	When this is enabled and countdown time is 0, it will initiate an alarm signal.

No	Type	Description
		It is detected when the genset is running.
25	Digital Input Alarm	When the digital input port is set users-defined and if it is active, the controller will initiate an alarm signal for the input port. It is detected in the detection range set for the input port.
26	PLC Function Alarm	When PLC function is set users-defined and if it is active, the controller will initiate an alarm signal. It is detected in the detection range set by the PLC function.
27	Power Factor Low	When this is enabled and the controller detects that the generator power factor has fallen below the pre-set limit, it will initiate an alarm signal. It is always detected.
28	THD High	When this is enabled and the controller detects that the THD has exceeded the pre-set limit, it will initiate an alarm signal. It is always detected.
29	Gen Volt Unbalance	When this is enabled and the controller detects that the voltage unbalanced value has exceeded the pre-set limit, it will initiate an alarm signal. It is always detected.
30	Ground Relay Close Failure	When controller detects that ground relay close failure, that is, breaker close input is inactive after ground relay close outputs, and then it will initiate an alarm signal. It is detected when ground relay is closing.
31	Ground Relay Open Failure	When controller detects that ground relay open failure, that is, breaker open input is inactive after ground relay open outputs, and then it will initiate an alarm signal. It is detected when ground relay is opening.

5.5 SAFETY TRIP AND STOP ALARMS

When controller detects safety trip and stop signals, it will open breaker after soft unloading and genset stops after cooling. Users need to reset alarms manually.

Table 11 Safety Trip and Stop Alarms

No	Type	Description
1	Over Speed	When this is enabled, and the controller detects that the genset speed is above the pre-set limit, it will initiate an alarm signal. It is always detected.
2	Under Speed	When this is enabled and the controller detects that the genset speed is below the pre-set limit, it will initiate an alarm signal. It is detected after “warming up” and before “stop idle”.
3	Loss of Speed Signal	When the controller detects the genset speed is 0, it shall issue an alarm signal. It is detected after “safety on time” before “ETS solenoid hold”.
4	Gen Over Frequency	When this is enabled, and the controller detects the genset frequency is

No	Type	Description
		above preset limit, it shall issue an alarm signal. It is always detected.
5	Gen Under Frequency	When this is enabled, and the controller detects the frequency is below the preset limit, it shall issue an alarm signal. It is detected after “warming up” and before “stop idle”.
6	Gen Over Voltage	When this is enabled, and the controller detects the genset voltage is above preset limit, it shall issue an alarm signal. It is always detected.
7	Gen Under Voltage	When this is enabled, and the controller detects the voltage is below the preset limit, it shall issue an alarm signal. It is detected after “warming up” and before “stop idle”.
8	Gen Over Current	When this is enabled, and the controller detects the genset current is above preset limit, it shall issue an alarm signal. It is always detected.
9	Unbalanced Current	When this is enabled, and the controller detects the unbalanced current is above preset limit, it shall issue an alarm signal. It is always detected.
10	Ground Fault	When this is enabled, and the controller detects the ground current is above the preset limit, it shall issue an alarm signal. It is always detected.
11	Reverse Power	When this is enabled, and the controller detects the reverse power (negative) is above the preset limit, it shall issue an alarm signal. It is always detected.
12	Over Power	When this is enabled, and the controller detects the genset power (positive) is above the preset limit, it shall issue an alarm signal. It is always detected.
13	Loss of Excitation Fault	When this is enabled, and the controller detects the genset reactive power (negative) is above the preset limit, it shall issue an alarm signal. It is always detected.
14	ECU Alarm	When the controller receives the engine alarm signal from J1939, it shall issue an alarm signal. It is always detected.
15	Flex. Sensor Open	When the controller detects the sensor circuit is open, it shall issue an alarm signal. It is always detected.
16	Flex. Sensor High	When over high alarm is enabled, and the controller detects the sensor value is above the preset upper limit, it shall issue an alarm signal. It is detected after “safety on time” before “ETS solenoid hold” when the sensor is selected as temperature sensor and pressure sensor; It is always detected when the sensor is selected as fuel level sensor.
17	Flex. Sensor Low	When over low alarm is enabled, and the controller detects the sensor value is below the preset low limit, it shall issue an alarm signal. It is detected after “safety on time” before “ETS solenoid hold” when the

No	Type	Description
		sensor is selected as temperature sensor and pressure sensor; It is always detected when the sensor is selected as fuel level sensor.
18	Flex. Sensor Error	When voltage or current input is selected for the curve type of the controller, and the controller detects input signal is abnormal, it shall issue an alarm signal, and meanwhile the curve is transferred to resistor type to prevent damaging the controller. It is always detected.
19	Charge Alternator Failure	When this is enabled, and the controller detects the charger voltage value is below the preset limit, it shall initiate an alarm signal. It is detected when the genset is normally running.
20	Battery Over Voltage	When this is enabled, and the controller detects the battery voltage is above the preset limit, it shall initiate an alarm signal. It is always detected.
21	Battery Under Voltage	When this is enabled, and the controller detects the battery voltage is below the preset limit, it shall initiate an alarm signal. It is always detected.
22	Fail to Sync.	If the controller does not detect sync. signal within the pre-set time, it will initiate an alarm signal. It is detected when breaker closes.
23	Few MSC Sets	When the controller detects the number of the paralleled gensets is smaller than the set minimum paralleled number, it will initiate an alarm signal. There are 2 possible reasons: a) the communication wire between the controllers is detached, leading to communication interrupt. b) the controller of paralleled gen-sets is not powered on. It is always detected.
24	Maintenance Time Due	When this is enabled and countdown time is 0, it will initiate an alarm signal. It is detected when the genset is running.
25	Digital Input Alarm	When the digital input port is set users-defined and if it is active, the controller will initiate an alarm signal for the input port. It is detected in the detection range set for the input port.
26	PLC Function Alarm	When PLC function is set users-defined and if it is active, the controller will initiate an alarm signal. It is detected in the detection range set by the PLC function.
27	Power Factor Low	When this is enabled and the controller detects that the generator power factor has fallen below the pre-set limit, it will initiate an alarm signal. It is always detected.
28	THD High	When this is enabled and the controller detects that the THD has exceeded the pre-set limit, it will initiate an alarm signal. It is always detected.
29	Gen Volt Unbalance	When this is enabled and the controller detects that the voltage unbalanced value has exceeded the pre-set limit, it will initiate an alarm

No	Type	Description
		signal. It is always detected.
30	Ground Relay Close Failure	When controller detects that ground relay close failure, that is, breaker close input is inactive after ground relay close outputs, and then it will initiate an alarm signal. It is detected when ground relay is closing.
31	Ground Relay Open Failure	When controller detects that ground relay open failure, that is, breaker open input is inactive after ground relay open outputs, and then it will initiate an alarm signal. It is detected when ground relay is opening.

SmartGen

5.6 TRIP ALARMS

When controller detects trip alarms, it will open breaker directly but not stop the genset. Users need to reset alarms manually.

Table 12 Trip Alarms

No	Type	Description
1	Over Speed	When this is enabled, and the controller detects that the genset speed is above the pre-set limit, it will initiate an alarm signal. It is always detected.
2	Under Speed	When this is enabled and the controller detects that the genset speed is below the pre-set limit, it will initiate an alarm signal. It is detected after “warming up” and before “stop idle”.
3	Loss of Speed Signal	When the controller detects the genset speed is 0, it will initiate an alarm signal. It is detected after “safety on time” before “ETS solenoid hold”.
4	Gen Over Frequency	When this is enabled, and the controller detects the genset frequency is above preset limit, it will initiate an alarm signal. It is always detected.
5	Gen Under Frequency	When this is enabled, and the controller detects the frequency is below the preset limit, it will initiate an alarm signal. It is detected after “warming up” and before “stop idle”.
6	Gen Over Voltage	When this is enabled, and the controller detects the genset voltage is above preset limit, it will initiate an alarm signal. It is always detected.
7	Gen Under Voltage	When this is enabled, and the controller detects the voltage is below the preset limit, it will initiate an alarm signal. It is detected after “warming up” and before “stop idle”.
8	Gen Over Current	When this is enabled, and the controller detects the genset current is above preset limit, it will initiate an alarm signal. It is always detected.
9	Unbalanced Current	When this is enabled, and the controller detects the unbalanced current is above preset limit, it will initiate an alarm signal. It is always detected.
10	Ground Fault	When this is enabled, and the controller detects the ground current is above the preset limit, it will initiate an alarm signal. It is always detected.
11	Reverse Power	When this is enabled, and the controller detects the reverse power (negative) is above the preset limit, it will initiate an alarm signal. It is always detected.
12	Over Power	When this is enabled, and the controller detects the genset power (positive) is above the preset limit, it will initiate an alarm signal. It is always detected.
13	Loss of Excitation	When this is enabled, and the controller detects the genset reactive

No	Type	Description
	Fault	power (negative) is above the preset limit, it will initiate an alarm signal. It is always detected.
14	ECU Alarm	When the controller receives the engine alarm signal from J1939, it will initiate an alarm signal. It is always detected.
15	Flex. Sensor Open	When the controller detects the sensor circuit is open, it will initiate an alarm signal. It is always detected.
16	Flex. Sensor High	When over high alarm is enabled, and the controller detects the sensor value is above the preset upper limit, it will initiate an alarm signal. It is detected after "safety on time" before "ETS solenoid hold" when the sensor is selected as temperature sensor and pressure sensor; It is always detected when the sensor is selected as fuel level sensor.
17	Flex. Sensor Low	When over low alarm is enabled, and the controller detects the sensor value is below the preset low limit, it will initiate an alarm signal. It is detected after "safety on time" before "ETS solenoid hold" when the sensor is selected as temperature sensor and pressure sensor; It is always detected when the sensor is selected as fuel level sensor.
18	Flex. Sensor Error	When voltage or current input is selected for the curve type of the controller, and the controller detects input signal is abnormal, it will initiate an alarm signal, and meanwhile the curve is transferred to resistor type to prevent damaging the controller. It is always detected.
19	Charge Alternator Failure	When this is enabled, and the controller detects the charger voltage value is below the preset limit, it will initiate an alarm signal. It is detected when the genset is normally running.
20	Battery Over Voltage	When this is enabled, and the controller detects the battery voltage is above the preset limit, it will initiate an alarm signal. It is always detected.
21	Battery Under Voltage	When this is enabled, and the controller detects the battery voltage is below the preset limit, it will initiate an alarm signal. It is always detected.
22	Fail to Sync.	If the controller doesn't detect sync. signal within the pre-set time, it will initiate an alarm signal. It is detected when breaker closes.
23	Volt. Asynchrony	After gen is closed, the voltage difference between busbar and generator is above the preset synchronous voltage, the controller will initiate an alarm signal. It is detected after breaker is closed.
24	Freq. Asynchrony	After gen is closed, the frequency difference between busbar and generator is above the preset synchronous frequency, the controller will initiate an alarm signal. It is detected after breaker is closed.

No	Type	Description
25	Phase Asynchrony	After gen is closed, the voltage phase difference between busbar and generator is above the preset synchronous phase, the controller will initiate an alarm signal. It is detected after breaker is closed.
26	Gen Close Failure	When the controller detects gen close failure, that is, after close output the close status input is inactive, it will initiate an alarm signal. It is detected after breaker is closed.
27	Gen Open Failure	When the controller detects gen open failure, that is, after open output the open status input is inactive, it will initiate an alarm signal. It is detected after breaker is closed.
28	Few MSC Sets	When the controller detects the number of the paralleled gensets is smaller than the set minimum paralleled number, it will initiate an alarm signal. There are 2 possible reasons: a) the communication wire between the controllers is detached, leading to communication interrupt. b) the controller of paralleled gen-sets is not powered on. It is always detected.
29	Maintenance Time Due	When this is enabled and countdown time is 0, it will initiate an alarm signal. It is detected when the genset is running.
30	Digital Input Alarm	When the digital input port is set users-defined and if it is active, the controller will initiate an alarm signal for the input port. It is detected in the detection range set for the input port.
31	PLC Function Alarm	When PLC function is set users-defined and if it is active, the controller will initiate an alarm signal. It is detected in the detection range set by the PLC function.
32	Power Factor Low	When this is enabled and the controller detects that the generator power factor has fallen below the pre-set limit, it will initiate an alarm signal. It is always detected.
33	THD High	When this is enabled and the controller detects that the THD has exceeded the pre-set limit, it will initiate an alarm signal. It is always detected.
34	Gen Volt Unbalance	When this is enabled and the controller detects that the voltage unbalanced value has exceeded the pre-set limit, it will initiate an alarm signal. It is always detected.
35	Ground Relay Close Failure	When controller detects that ground relay close failure, that is, breaker close input is inactive after ground relay close outputs, and then it will initiate an alarm signal. It is detected when ground relay is closing.
36	Ground Relay Open Failure	When controller detects that ground relay open failure, that is, breaker open input is inactive after ground relay open outputs, and then it will initiate an alarm signal. It is detected when ground relay is opening.

5.7 TRIP AND STOP ALARM

When the controller detects trip and stop signals, it will open breaker directly and stop the genset after cooling. Users need to reset alarms manually.

Table 13 Trip and Stop Alarms

No	Type	Description
1	Over Speed	When this is enabled, and the controller detects that the genset speed is above the pre-set limit, it will initiate an alarm signal. It is always detected.
2	Under Speed	When this is enabled and the controller detects that the genset speed is below the pre-set limit, it will initiate an alarm signal. It is detected after “warming up” and before “stop idle”.
3	Loss of Speed Signal	When the controller detects the genset speed is 0, it will initiate an alarm signal. It is detected after “safety on time” before “ETS solenoid hold”.
4	Gen Over Frequency	When this is enabled, and the controller detects the genset frequency is above preset limit, it will initiate an alarm signal. It is always detected.
5	Gen Under Frequency	When this is enabled, and the controller detects the frequency is below the preset limit, it will initiate an alarm signal. It is detected after “warming up” and before “stop idle”.
6	Gen Over Voltage	When this is enabled, and the controller detects the genset voltage is above preset limit, it will initiate an alarm signal. It is always detected.
7	Gen Under Voltage	When this is enabled, and the controller detects the voltage is below the preset limit, it will initiate an alarm signal. It is detected after “warming up” and before “stop idle”.
8	Gen Over Current	When this is enabled, and the controller detects the genset current is above preset limit, it will initiate an alarm signal. It is always detected.
9	Unbalanced Current	When this is enabled, and the controller detects the unbalanced current is above preset limit, it will initiate an alarm signal. It is always detected.
10	Ground Fault	When this is enabled, and the controller detects the ground current is above the preset limit, it will initiate an alarm signal. It is always detected.
11	Reverse Power	When this is enabled, and the controller detects the reverse power (negative) is above the preset limit, it will initiate an alarm signal. It is always detected.
12	Over Power	When this is enabled, and the controller detects the genset power (positive) is above the preset limit, it will initiate an alarm signal. It is always detected.
13	Loss of Excitation Fault	When this is enabled, and the controller detects the genset reactive

No	Type	Description
		power (negative) is above the preset limit, it will initiate an alarm signal. It is always detected.
14	ECU Alarm	When the controller receives the engine alarm signal from J1939, it will initiate an alarm signal. It is always detected.
15	Flex. Sensor Open	When the controller detects the sensor circuit is open, it will initiate an alarm signal. It is always detected.
16	Flex. Sensor High	When over high alarm is enabled, and the controller detects the sensor value is above the preset upper limit, it will initiate an alarm signal. It is detected after "safety on time" before "ETS solenoid hold" when the sensor is selected as temperature sensor and pressure sensor; It is always detected when the sensor is selected as fuel level sensor.
17	Flex. Sensor Low	When over low alarm is enabled, and the controller detects the sensor value is below the preset low limit, it will initiate an alarm signal. It is detected after "safety on time" before "ETS solenoid hold" when the sensor is selected as temperature sensor and pressure sensor; It is always detected when the sensor is selected as fuel level sensor.
18	Flex. Sensor Error	When voltage or current input is selected for the curve type of the controller, and the controller detects input signal is abnormal, it will initiate an alarm signal, and meanwhile the curve is transferred to resistor type to prevent damaging the controller. It is always detected.
19	Charge Alternator Failure	When this is enabled, and the controller detects the charger voltage value is below the preset limit, it will initiate an alarm signal. It is detected when the genset is normally running.
20	Battery Over Voltage	When this is enabled, and the controller detects the battery voltage is above the preset limit, it will initiate an alarm signal. It is always detected.
21	Battery Under Voltage	When this is enabled, and the controller detects the battery voltage is below the preset limit, it will initiate an alarm signal. It is always detected.
22	Fail to Sync.	If the controller does not detect sync. signal within the pre-set time, it will initiate an alarm signal. It is detected when breaker closes.
23	Mains Over Freq.	When the controller detects mains frequency is above the set limit, it will initiate an alarm signal. It is detected after mains parallel mode is active and gen is closed.
24	Mains Under Freq.	When the controller detects mains frequency is below the set limit, it will initiate an alarm signal. It is detected after mains parallel mode is active and gen is closed.
25	Mains Over Voltage	When the controller detects mains voltage is above the set limit, it will initiate an alarm signal.

No	Type	Description
		It is detected after mains parallel mode is active and gen is closed.
26	Mains Under Voltage	When the controller detects mains voltage is below the set limit, it will initiate an alarm signal. It is detected after mains parallel mode is active and gen is closed.
27	Mains ROCOF	When the controller detects mains ROCOF is above the set limit, it will initiate an alarm signal. It is detected after mains parallel mode is active and gen is closed.
28	Mains Vector Shift	When the controller detects mains voltage vector change is above the set limit, it will initiate an alarm signal. It is detected after mains parallel mode is active and gen is closed.
29	Few MSC Sets	When the controller detects the number of the paralleled gensets is smaller than the set minimum paralleled number, it will initiate an alarm signal. There are 2 possible reasons: a) the communication wire between the controllers is detached, leading to communication interrupt. b) the controller of paralleled gen-sets is not powered on. It is always detected.
30	Maintenance Time Due	When this is enabled and countdown time is 0, it will initiate an alarm signal. It is detected when the genset is running.
31	Digital Input Alarm	When the digital input port is set users-defined and if it is active, the controller will initiate an alarm signal for the input port. It is detected in the detection range set for the input port.
32	PLC Function Alarm	When PLC function is set users-defined and if it is active, the controller will initiate an alarm signal. It is detected in the detection range set by the PLC function.
33	Power Factor Low	When this is enabled and the controller detects that the generator power factor has fallen below the pre-set limit, it will initiate an alarm signal. It is always detected.
34	THD High	When this is enabled and the controller detects that the THD has exceeded the pre-set limit, it will initiate an alarm signal. It is always detected.
35	Gen Volt Unbalance	When this is enabled and the controller detects that the voltage unbalanced value has exceeded the pre-set limit, it will initiate an alarm signal. It is always detected.
36	MSC Mains Decoupling	When the controller receives “MSC Mains Decoupling” alarm, it will initiate an alarm signal. It is always detected.
37	Ground Relay Close Failure	When the controller detects that ground relay close failure, that is, breaker close input is inactive after ground relay close outputs, and then it will initiate an alarm signal. It is detected when ground relay is closing.

No	Type	Description
38	Ground Relay Open Failure	When controller detects that ground relay open failure, that is, breaker open input is inactive after ground relay open outputs, and then it will initiate an alarm signal. It is detected when ground relay is opening.
39	Static Parallel Failure	After the controller starts the genset, if it does not reach the load speed in the preset delay, the controller will initiate an alarm signal. It is detected when static parallel mode is active and during start process.

SmartGen

5.8 SHUTDOWN ALARMS

When controller detects shutdown alarms, it will send signal to open breaker and shut down the generator. Users need to reset alarms manually.

Table 14 Shutdown Alarms

No	Type	Description
1	Emergency Stop	When the controller detects emergency stop signals, it will initiate a shutdown alarm. It is always detected.
2	Over Speed	When this is enabled, and the controller detects that the genset speed is above the pre-set limit, it will initiate an alarm signal. It is always detected.
3	Under Speed	When this is enabled and the controller detects that the genset speed is below the pre-set limit, it will initiate an alarm signal. It is detected after “warming up” and before “stop idle”.
4	Loss of Speed Signal	When the controller detects the genset speed is 0, it will initiate an alarm signal. It is detected after “safety on time” before “ETS solenoid hold”.
5	Gen Over Frequency	When this is enabled, and the controller detects the genset frequency is above preset limit, it will initiate an alarm signal. It is always detected.
6	Gen Under Frequency	When this is enabled, and the controller detects the frequency is below the preset limit, it will initiate an alarm signal. It is detected after “warming up” and before “stop idle”.
7	Gen Over Voltage	When this is enabled, and the controller detects the genset voltage is above preset limit, it will initiate an alarm signal. It is always detected.
8	Gen Under Voltage	When this is enabled, and the controller detects the voltage is below the preset limit, it will initiate an alarm signal. It is detected after “warming up” and before “stop idle”.
9	Fail to Start	If the genset does not start during the start attempts, the controller will initiate an alarm signal.
10	Gen Over Current	When this is enabled, and the controller detects the genset current is above preset limit, it will initiate an alarm signal. It is always detected.
11	Unbalanced Current	When this is enabled, and the controller detects the unbalanced current is above preset limit, it will initiate an alarm signal. It is always detected.
12	Ground Fault	When this is enabled, and the controller detects the ground current is above the preset limit, it will initiate an alarm signal. It is always detected.
13	Reverse Power	When this is enabled, and the controller detects the reverse power (negative) is above the preset limit, it will initiate an alarm signal.

No	Type	Description
		It is always detected.
14	Over Power	When this is enabled, and the controller detects the genset power (positive) is above the preset limit, it will initiate an alarm signal. It is always detected.
15	Loss of Excitation Fault	When this is enabled, and the controller detects the genset reactive power (negative) is above the preset limit, it will initiate an alarm signal. It is always detected.
16	ECU Comm. Failure	When the controller does not receive the engine alarm signal from J1939, it will initiate an alarm signal. It is always detected.
17	ECU Alarm	When the controller receives the engine alarm signal from J1939, it will initiate an alarm signal. It is always detected.
18	Aux High Temp Alarm	When the controller detects that this alarm in the input port is active, it will initiate an alarm signal. It is detected after “safety on time” before “ETS solenoid hold”.
19	Aux Low OP Alarm	When the controller detects that this alarm in the input port is active, it will initiate an alarm signal. It is detected after “safety on time” before “ETS solenoid hold”.
20	MSC ID Error	When the controller detects that there is same IDs on the MSC bus, it will initiate shutdown alarm signal. It is always detected.
21	Voltage Bus Error	When the controller detects other gensets are closed, but busbar voltage is below the dead busbar voltage, it will initiate an alarm signal. It is detected when gen is closed.
22	Gen Phase Seq. Error	When the controller detects phase sequence error, it will initiate an alarm signal. It is always detected.
23	Voltage Bus Phase Seq. Error	When the controller detects busbar sequence error, it will initiate an alarm signal. It is always detected.
24	Flex. Sensor Open	When the controller detects the sensor circuit is open, it will initiate an alarm signal. It is always detected.
25	Flex. Sensor High	When over high alarm is enabled, and the controller detects the sensor value is above the preset upper limit, it will initiate an alarm signal. It is detected after “safety on time” before “ETS solenoid hold” when the sensor is selected as temperature sensor and pressure sensor; It is always detected when the sensor is selected as fuel level sensor.
26	Flex. Sensor Low	When over low alarm is enabled, and the controller detects the sensor value is below the preset low limit, it will initiate an alarm signal. It is detected after “safety on time” before “ETS solenoid hold” when the sensor is selected as temperature sensor and pressure sensor;

No	Type	Description
		It is always detected when the sensor is selected as fuel level sensor.
27	Flex. Sensor Error	When voltage or current input is selected for the curve type of the controller, and the controller detects input signal is abnormal, it will initiate an alarm signal, and meanwhile the curve is transferred to resistor type to prevent damaging the controller. It is always detected.
28	Charge Alternator Failure	When this is enabled, and the controller detects the charger voltage value is below the preset limit, it will initiate an alarm signal. It is detected when the genset is normally running.
29	Battery Over Voltage	When this is enabled, and the controller detects the battery voltage is above the preset limit, it will initiate an alarm signal. It is always detected.
30	Battery Under Voltage	When this is enabled, and the controller detects the battery voltage is below the preset limit, it will initiate an alarm signal. It is always detected.
31	Fail to Sync.	If the controller does not detect sync. signal within the pre-set time, it will initiate an alarm signal. It is detected when closes.
32	Few MSC Sets	When the controller detects the number of the paralleled gensets is smaller than the set minimum paralleled number, it will initiate an alarm signal. There are 2 possible reasons: a) the communication wire between the controllers is detached, leading to communication interrupt. b) the controller of paralleled gen-sets is not powered on. It is always detected.
33	Maintenance Time Due	When this is enabled and countdown time is 0, it will initiate an alarm signal. It is detected when the genset is running.
34	Low Coolant Level	When the controller detects Low Coolant Level in the input port is active, it will initiate an alarm signal. It is always detected.
35	Detonation Alarm	When the controller detects Detonation Alarm in the input port is active, it will initiate an alarm signal. It is always detected.
36	Gas Leakage Alarm	When the controller detects Gas Leakage Alarm in the input port is active, it will initiate an alarm signal. It is always detected.
37	Digital Input Alarm	When the digital input port is set users-defined and if it is active, the controller will initiate an alarm signal for the input port. It is detected in the detection range set for the input port.
38	PLC Function Alarm	When PLC function is set users-defined and if it is active, the controller will initiate an alarm signal. It is detected in the detection range set by the PLC function.
39	Power Factor Low	When this is enabled and the controller detects that the generator

No	Type	Description
		power factor has fallen below the pre-set limit, it will initiate an alarm signal. It is always detected.
40	THD High	When this is enabled and the controller detects that the THD has exceeded the pre-set limit, it will initiate an alarm signal. It is always detected.
41	Gen Volt Unbalance	When this is enabled and the controller detects that the voltage unbalanced value has exceeded the pre-set limit, it will initiate an alarm signal. It is always detected.
42	Ground Relay Close Failure	When the controller detects that ground relay close failure, that is, breaker close input is inactive after ground relay close outputs, and then it will initiate an alarm signal. It is detected when ground relay is closing.
43	Ground Relay Open Failure	When controller detects that ground relay open failure, that is, breaker open input is inactive after ground relay open outputs, and then it will initiate an alarm signal. It is detected when ground relay is opening.

SmartGen

6 WIRING CONNECTION

6.1 ILLUSTRATION

HGM8510 is composed of HGM8510D display module and HGM8510M master control module.

6.2 HGM8510D MODULE

6.2.1 TERMINAL DESCRIPTION

Fig.4 HGM8510D Terminal

Terminal description: NO represents normally open; NC represents normally close.

6.2.2 COMMUNICATION PORT

Table 15 Communication Port

No.	Function	Cable Size	Parameter	Remark
	USB DEVICE		USB communication port	USB-TYPE B port, connecting PC software
	USB HOST		USB port	USB-TYPE A port, connecting USB to read and write configuration files
	ETHERNET 1	SF/UTP CAT5e	ETHERNET port 1	RJ45 port, connecting master control module, PC software
	ETHERNET 2	SF/UTP CAT5e	ETHERNET port 2	

6.2.3 RS485 COMMUNICATION, RELAY OUTPUT, POWER PORTS

Table 16 RS485 Communication, Relay Output, Power Ports

No.	Function	Cable Size	Description	Remark
1	B(-)	0.5mm^2	RS485 communication port	Default baud rate is 9600bps, no parity, 2-bit stop bit; Standard MODBUS-RTU protocol.
2	A(+)	0.5mm^2		
3	TR	0.5mm^2	Outlet terminal of	Short connect TR and A(+), which

No.	Function	Cable Size	Description	Remark
			120Ω terminal matching resistor inside the controller RS485 communication port	represents that 120Ω resistor has been connected inside controller A(+) and B(-), external resistor is not required.
4	DIGI.OUTPUT_NC	1.5mm²	Digital output port	DC 30V/8A connection wire.
5	DIGI.OUTPUT _COM	1.5mm²		
6	DIGI.OUTPUT _NO	1.5mm²		
7	B+	2.5mm²	DC(8~35)V	Controller power input.
8	B-	2.5mm²		
9	PE	2.5mm²	Grounding connected	

6.3 HGM8510M MODULE

6.3.1 TERMINAL DESCRIPTION

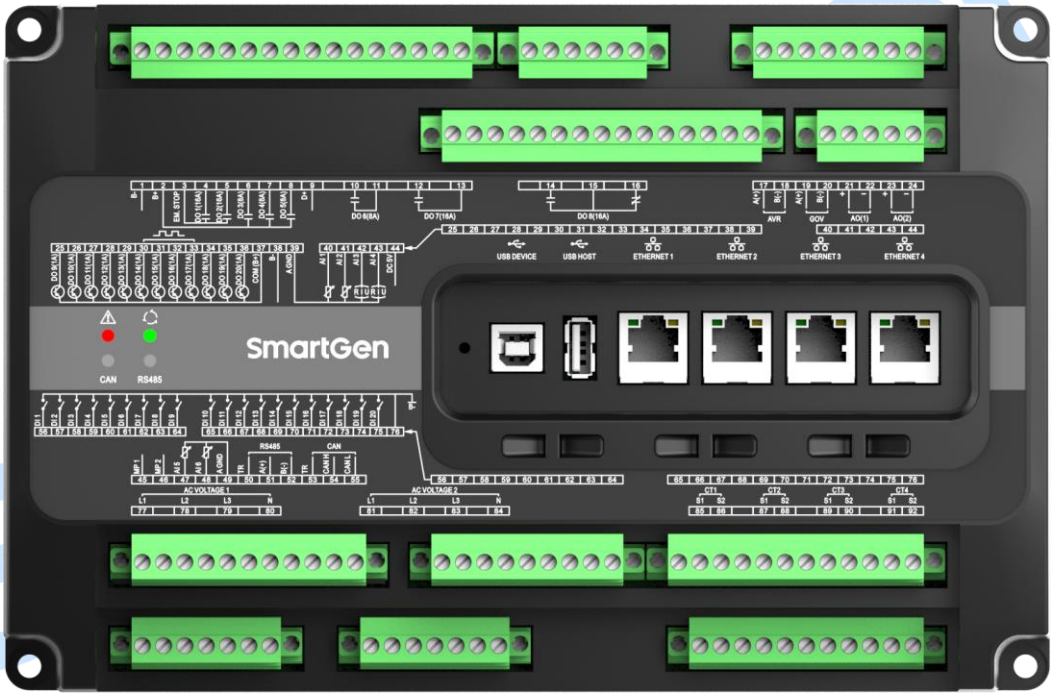

Fig.5 HGM8510M Terminal

6.3.2 POWER & RELAY OUTPUT PORTS

Table 17 Power & Relay Output Ports

No.	Function	Cable Size	Description	Remark
1	B-	2.5mm²	DC(8~35)V	Controller power input.
2	B+	2.5mm²		
3	EM.STOP	2.5mm²	Connect B+ via emergency stop button	COM input of digital output 1 and 2.
4	DO1	1.5mm²	Digital output 1 (default: fuel relay output)	B+ is supplied by 3 points, rated 16A.

No.	Function	Cable Size	Description	Remark
5	DO2	1.5mm²	Digital output 2 (default: start relay output)	B+ is supplied by 3 points, rated 16A.
6	DO3	1.5mm²	Digital output 3 (default: gen normal output)	B+ is supplied by 2 points, rated 8A.
7	DO4	1.5mm²	Digital output 4 (default: common alarm output)	B+ is supplied by 2 points, rated 8A.
8	DO5	1.5mm²	Digital output 5 (default: ETS output)	B+ is supplied by 2 points, rated 8A.
9	D+	1.0mm²	Charger D+ input	Connect with charger D+ (WL) terminal. If this terminal does not exist, hang it in the air.
10	DO6_NO	1.5mm²	Digital output 6 (default: idle control output)	Normally open output, rated 8A.
11	DO6 _COM	1.5mm²		
12	DO7 _NO	1.5mm²	Digital output 7 (default: gen close output)	Normally open output, rated 16A.
13	DO7 _COM	1.5mm²		
14	DO8_NO	1.5mm²	Digital output 8 (default: gen open output)	Normally open output, rated 16A.
15	DO8 _COM	1.5mm²		Public points of relay.
16	DO8 _NC	1.5mm²		Normally close output, rated 16A.
17	AVR A(+)	1.0mm²	AVR voltage control wire	Shielding wire is recommended. Shielding layer shall be grounded at GOV end.
18	AVR B(-)	1.0mm²		
19	GOV A(+)	1.0mm²	GOV speed control wire	Shielding wire is recommended. Shielding layer shall be grounded at AVR end.
20	GOV B(-)	1.0mm²		
21	AO(1)+	1.0mm²	Output -20mA~20mA	
22	AO(1)-	1.0mm²		
23	AO(2)+	1.0mm²		
24	AO(2)-	1.0mm²		
25	DO9	1.0mm²	Digital output 9	Digital output 9-20 are triode outputs, which needs terminal 37 to be connected to B+ voltage, and then output in terminal 25-26. The rated loading current is 1A.
26	DO10	1.0mm²	Digital output 10	
27	DO11	1.0mm²	Digital output 11	
28	DO12	1.0mm²	Digital output 12	
29	DO13	1.0mm²	Digital output 13	
30	DO14	1.0mm²	Digital output 14	
31	DO15	1.0mm²	Digital output 15	
32	DO16	1.0mm²	Digital output 16	
33	DO17	1.0mm²	Digital output 17	
34	DO18	1.0mm²	Digital output 18	
35	DO19	1.0mm²	Digital output 19	
36	DO20	1.0mm²	Digital output 20	
37	COM(B+)	2.5mm²	COM of digital output 9-20	Connect power B+.
38	B-	1.5mm²	Power negative B-	Connect power B-.

No.	Function	Cable Size	Description	Remark
39	AI COM	1.0mm²	COM of analog input port	
40	AI1	1.0mm²	Can be configured as resistance type ((0-1000)Ω)	
41	AI2	1.0mm²	Can be configured as resistance type ((0-1000)Ω)	
42	AI3	1.0mm²	Can be configured as resistance type ((0-1000)Ω), current type ((0-20)mA), voltage type ((0-10)V)	
43	AI4	1.0mm²		
44	DC5.0V	1.0mm²	Supply 5V power for AI3/AI4 access voltage type input	Max output current is 30mA.
45	MP1	0.5mm²	Speed sensor input 1	Connect with speed sensor, and shielding wire is recommended. B- is already connected with speed sensor input 2 inside the controller.
46	MP2	0.5mm²	Speed sensor input 2	
47	AI5	1.0mm²	Can be configured as resistance type ((0-1000)Ω)	
48	AI6	1.0mm²	Can be configured as resistance type ((0-1000)Ω)	
49	AGND	1.0mm²	COM of analog input port	
50	TR	0.5mm²	Outlet terminal of 120Ω terminal matching resistor inside the controller RS485 communication port	Short connect TR and A(+), which represents that 120Ω resistor has been connected inside controller A(+) and B(-), external resistor is not required.
51	A(+)	0.5mm²	RS485 communication port	Default baud rate is 9600bps, no parity, 2-bit stop bit; Standard MODBUS-RTU protocol.
52	B(-)	0.5mm²		
53	TR	0.5mm²	Outlet terminal of 120Ω terminal matching resistor inside the controller CANBUS communication port	Short connect TR and CANH, which represents that 120Ω resistor has been connected inside controller CANH and CANL, external resistor is not required.
54	CANH	0.5mm²	CANBUS communication port	Communication port for ECU J939 and expansion port that are used to expand digital input module, output module or analog input module.
55	CANL	0.5mm²		
56	DI1	1.0mm²	Digital input 1	Connect terminal 76(B-) for active.
57	DI2	1.0mm²	Digital input 2	
58	DI3	1.0mm²	Digital input 3	

No.	Function	Cable Size	Description	Remark
59	DI4	1.0mm²	Digital input 4	
60	DI5	1.0mm²	Digital input 5	
61	DI6	1.0mm²	Digital input 6	
62	DI7	1.0mm²	Digital input 7	
63	DI8	1.0mm²	Digital input 8	
64	DI9	1.0mm²	Digital input 9	
65	DI10	1.0mm²	Digital input 10	
66	DI11	1.0mm²	Digital input 11	
67	DI12	1.0mm²	Digital input 12	
68	DI13	1.0mm²	Digital input 13	
69	DI14	1.0mm²	Digital input 14	
70	DI15	1.0mm²	Digital input 15	
71	DI16	1.0mm²	Digital input 16	
72	DI17	1.0mm²	Digital input 17	
73	DI18	1.0mm²	Digital input 18	
74	DI19	1.0mm²	Digital input 19	
75	DI20	1.0mm²	Digital input 20	
76	B-	1.5mm²	COM B- of digital input 1-20	
77	L1 (Busbar)	1.5mm²	(Busbar) A phase voltage input	(2A fuse is recommended).
78	L2 (Busbar)	1.5mm²	(Busbar) B phase voltage input	
79	L3 (Busbar)	1.5mm²	(Busbar) C phase voltage input	
80	N (Busbar)	1.5mm²	(Busbar) N phase voltage input	
81	L1 (Gen)	1.5mm²	(Gen) A phase voltage input	
82	L2 (Gen)	1.5mm²	(Gen) B phase voltage input	
83	L3 (Gen)	1.5mm²	(Gen) C phase voltage input	
84	N (Gen)	1.5mm²	(Gen) N phase voltage input	
85	S1 (CT1)	2.5mm²	Gen A phase current	Outside connect to secondary coil of current transformer (rated 5A).
86	S2 (CT1)	2.5mm²		
87	S1 (CT2)	2.5mm²	Gen B phase current	
88	S2 (CT2)	2.5mm²		
89	S1 (CT3)	2.5mm²	Gen C phase current	
90	S2 (CT3)	2.5mm²		
91	S1 (CT4)	2.5mm²	Ground current	
92	S2 (CT4)	2.5mm²		

6.3.3 COMMUNICATION PORT

Table 18 Communication Port

No.	Function	Cable Size	Parameter	Remark
	USB DEVICE		USB communication port	USB-TYPE B port, connecting PC software
	USB HOST		USB port	USB-TYPE A port, connecting USB to record event log
	ETHERNET 1	SF/UTP CAT5e	ETHERNET port 1	RJ45 port, connecting master control module, PC software, display module or other monitoring platforms.
	ETHERNET 2	SF/UTP CAT5e	ETHERNET port 2	
	ETHERNET 3	SF/UTP CAT5e	ETHERNET port 3	
	ETHERNET 4	SF/UTP CAT5e	ETHERNET port 4	

SmartGen

7 SCOPES AND DEFINITIONS OF PROGRAMMABLE PARAMETERS

7.1 CONTENTS AND SCOPES OF PARAMETERS

Table 19 Parameter Setting

No.	Items	Parameters	Defaults	Description
Module Setting				
1.	Power On Mode	(0-2)	0	0: Stop Mode 1: Manual Mode 2: Auto Mode
2.	Communication Address	(1-254)	1	Controller address for remote monitoring.
3.	Communication Stop Bit	(0-1)	0	0: 2-bit Stop Bit 1: 1-bit Stop Bit It cannot be set via front panel.
4.	Language	(0-2)	0	0: Simplified Chinese 1: English 2: Other
5.	Password	(0-65535)	00318	It is used to enter advanced parameter setting.
6.	Daylight Saving Time	(0-1)	0	0: Disable 1: Enable Start and end time for this can be set.
7.	Date and Time			It is used for date and time settings.
8.	Temperature Unit	(0-1)	0	0: °C; 1: °F
9.	Pressure Unit	(0-2)	0	0: kPa; 1: psi ; 2: bar
10.	Backlight Time	(0-3600)s	300	
11.	Non-parallel Mode	(0-1)	0	0: Disable 1: Enable
12.	Network Setting	(0-1)	1	0: Disable 1: Enable
13.	J1939-75	(0-1)	0	0: Disable 1: Enable
14.	Alarm Data Interval	(0-60.0)s	0.1	
15.	Master/Redundancy	(0-2)	0	0: Single Controller 1: Master Control Controller 2: Redundancy Controller
16.	Fn Function	(0-16)	5	0: Fn Key 1: Stop Key 2: Start Key 3: Manual Key 4: Auto Key 5: Close Key 6: Open Key 7: Power Output 8: Tier4 Control 9: Left Key

No.	Items	Parameters	Defaults	Description
				10: Right Key 11: Up Key 12: Down Key 13: Confirm Key 14: Return Key 15: Test Key 16: Reserved
17.	USB Record Interval	(0.1-60.0)s	1.0	
18.	Ring Network Disconnect Alarm	(0-1)	1	0: Disable 1: Enable
19.	Main Interface Display 1 Config.	(0-21)	0	0: Flex. Sensor 1 1: Flex. Sensor 2 2: Flex. Sensor 3 3: Flex. Sensor 4 4: Flex. Sensor 5 5: Flex. Sensor 6 6: Battery Voltage 7: Gen Voltage 8: DEF Level 9: DPF Soot Content 10: Engine Temperature 11: Oil Pressure 12-21: Reserved
20.	Main Interface Display 2 Config.	(0-21)	6	
21.	Main Interface Display 3 Config.	(0-21)	1	
22.	Main Interface Display 4 Config.	(0-21)	2	
23.	Module Mute	(0-2)	0	0: Not Mute; 1: Only Mute Key; 2: Mute
Timer Setting				
1.	Start Delay	(0-3600)s	5	Start delay time when genset power is too large, the scheduled genset starts as mains abnormal or remote start signal is active, or remote start (on demand) signal is active.
2.	Stop Delay	(0-3600)s	30	Stop delay time when genset power is too small, the scheduled genset stops as mains normal or remote start signal is inactive.
3.	Preheat Delay	(0-3600)s	0	Time for pre-powering the heat plug before starter is powered up.
4.	Cranking Time	(3-60)s	8	Time for starter power on each time.
5.	Crank Rest Time	(3-60)s	10	The waiting time before second power up when engine start fails.
6.	Safety On Delay	(0-3600)s	10	Alarms for low oil pressure, high temperature, under speed, under frequency/voltage, charging failure are inactive.
7.	Start Idle Time	(0-3600)s	10	Running time for genset idling when the genset is starting.

smartgen

No.	Items	Parameters	Defaults	Description
8.	Warming Up Time	(0-3600)s	30	Warming up time before genset switch on, after high-speed running.
9.	Cooling Time	(0-3600)s	60	Cooling time before unloading, after genset stopping.
10.	Stop Idle Time	(0-3600)s	10	Running time for genset idling speed when the genset is stopping.
11.	ETS Solenoid Hold	(0-3600)s	20	Time for the stop electromagnet energization as the genset is stopping.
12.	Fail to Stop Delay	(0-3600)s	0	Time after "idle delay" is over before the complete stop when "ETS Solenoid Hold" is set "0"; time after "ETS Solenoid Hold" delay is over before the complete stop when it is set other than "0".
13.	After Stop Time	(0-3600)s	0	Time between a complete stop and standby.
14.	Gas Timers Enable	(0-1)	0	0: Disable 1: Enable When gas timer is enabled, fuel output is used for controlling gas valve.
15.	Choke On Time	(0-60)s	0	Output time for gas concentration increases after the engine starts.
16.	Gas On Delay	(0-60)s	0	After this period, gas valve control outputs after the engine starts.
17.	Ignition Off Delay	(0-60)s	0	After this period, gas ignition control stops outputting after the gas valve is closed.
18.	Smart Pre-heat	(0-1) (0-7) (0-1000)℃	0 0 40	0: Disable 1: Enable Sensor is pre-set correlation sensor. Set value is sensor threshold at period end. When it is enabled, if selected sensor value is above the set value, it shall end the pre-heating in advance.
19.	Smart Idling	(0-1) (0-7) (0-1000)℃	0 0 50	0: Disable 1: Enable Sensor is pre-set correlation sensor. Set value is sensor threshold at period end. When it is enabled, if selected sensor value is above the set value, it shall end the start idle in advance.
20.	Fast Start Delay	(0-3600)s	2	Start delay time when genset power is too large, fast start conditions are met and the scheduled genset starts as mains abnormal or remote start signal is active.
21.	Fast Stop Delay	(0-3600)s	5	Stop delay time when genset power is too small, fast strop conditions are met and the scheduled genset stops as mains normal or

No.	Items	Parameters	Defaults	Description
				remote start signal is inactive.
22.	Alarm Start Delay	(0-3600)s	1	Start delay time when current genset starts due to other genset alarm as remote start (on demand) signal is active.
23.	Alarm Stop Delay	(0-3600)s	1	Stop delay time when current genset starts due to other genset alarm and genset stops normally or current gensets issues alarm and stops as remote start (on demand) signal is active.
24.	Trigger Start Delay	(0-3600)s	1	Start delay time when genset starts due to other conditions except for normal start delay and alarm start delay as remote start (on demand) signal is active.
25.	Trigger Stop Delay	(0-3600)s	1	Stop delay time when genset stops due to other conditions except for normal stop delay and alarm stop delay as remote start (on demand) signal is active.
26.	Stop Idle Increasing Time	(0-3600)s	0	Set stop idle increasing time.
Engine Setting				
1.	Engine Type	(0-69)	0	Default: conventional engine (not ECU) When the controller is connected to J1939 set, choose the corresponding engine type.
2.	Flywheel Teeth	(10-300)	118	Tooth number of the engine for judging starter separation conditions and inspecting of engine speed. See the installation instructions.
3.	Rated Speed	(0-6000)r/min	1500	Offer standard to judge over/under/loading speed.
4.	Loading Speed	(0-100.0)%	90.0	Set value is percentage of rated speed. Controller detects when it is ready to take load, if speed is below loading speed, it will not enter normal running period.
5.	Loss of Speed Signal Delay	(0-3600)s	5	Time from detecting speed is 0 to action confirm.
6.	Loss of Speed Signal Action	(0~7)	7	0: None; 1: Warning; 2: Block; 3: Safety Trip; 4: Safety Trip and Stop; 5: Trip; 6: Trip and Stop; 7: Shutdown.
7.	Over Speed 1 Set	(0-1) (0-200.0)% (0-200.0)% (0-3600)s (0-7)	1 114.0 112.0 2 7	0: Disable 1: Enable Set value is rated speed percentage. Return value is rated speed percentage. Delay value Action

No.	Items	Parameters	Defaults	Description
8.	Over Speed 2 Set	(0-1) (0-200.0)% (0-200.0)% (0-3600)s (0-7)	1 110.0 108.0 5 1	0: Disable 1: Enable Set value is rated speed percentage. Return value is rated speed percentage. Delay value Action
9.	Under Speed 1 Set	(0-1) (0-200.0)% (0-200.0)% (0-3600)s (0-7)	1 80.0 82.0 3 7	0: Disable 1: Enable Set value is rated speed percentage. Return value is rated speed percentage. Delay value Action
10.	Under Speed 2 Set	(0-1) (0-200.0)% (0-200.0)% (0-3600)s (0-7)	1 86.0 90.0 5 1	0: Disable 1: Enable Set value is rated speed percentage. Return value is rated speed percentage. Delay value Action
11.	Battery Voltage	(0-60.0)V	24.0	Standard for detecting of over/under voltage of battery.
12.	Battery Over Volt 1	(0-1) (0-200.0)% (0-200.0)% (0-3600)s (0-7)	1 120.0 115.0 60 1	0: Disable 1: Enable Set value is batt. rated volt percentage. Return value is batt. rated volt percentage. Delay value Action
13.	Battery Over Volt 2	(0-1) (0-200.0)% (0-200.0)% (0-3600)s (0-7)	0 120.0 115.0 60 0	0: Disable 1: Enable Set value is batt. rated volt percentage. Return value is batt. rated volt percentage. Delay value Action
14.	Battery Under Volt 1	(0-1) (0-200.0)% (0-200.0)% (0-3600)s (0-7)	1 85.0 90.0 60 1	0: Disable 1: Enable Set value is batt. rated volt percentage. Return value is batt. rated volt percentage. Delay value Action
15.	Battery Under Volt 2	(0-1) (0-200.0)% (0-200.0)% (0-3600)s (0-7)	0 85.0 90.0 60 0	0: Disable 1: Enable Set value is batt. rated volt percentage. Return value is batt. rated volt percentage. Delay value Action
16.	Charge Alt Failure	(0-1) (0-60.0)V (0-60.0)V (0-3600)s (0-7)	1 8.0 10.0 10 1	0: Disable 1: Enable Set value Return value Delay value Action
17.	Start Attempts	(1-10)times	3	Maximum crank times for start failures;

No.	Items	Parameters	Defaults	Description
				when it reaches this, controller will send start failure signal.
18.	Crank Disconnect Conditions	(0-6)	2	There are 3 conditions of disconnecting starter with engine. Each condition can be used alone and simultaneously to separate the start motor and engine as soon as possible.
19.	Disconnect Generator Freq.	(0-200.0)%	24.0	Percentage of the generating rated frequency; when generator frequency is higher than the set value, starter will be disconnected. See the below installation instruction.
20.	Disconnect Engine Speed	(0-200.0)%	24.0	Percentage of the rated speed; when generator speed is higher than the set value, starter will be disconnected. See the installation instruction.
21.	Disconnect Oil Pressure	(0-1000)kPa	200	When oil pressure is higher than the set value, starter will be disconnected. See the installation instruction.
22.	ECU Fault Lamp	(0-7)	1	0: None; 1: Warning; 2: Block; 3: Safety Trip; 4: Safety Trip and Stop; 5: Trip; 6: Trip and Stop; 7: Shutdown.
23.	ECU Stop Lamp	(0-7)	7	
24.	ECU Warning Lamp	(0-7)	1	
25.	ECU Protect Lamp	(0-7)	1	
26.	Intelligent Display of ECU Data	(0-1)	1	0: Disable; 1: Enable
27.	ECU Data Display Configuration 1	(0-0xffff)	0xffff	There are multiple options for it and options can selected to display separately or together.
28.	ECU Data Display Configuration 2	(0-0xffff)	0xffff	There are multiple options for it and options can selected to display separately or together.
29.	ECU Data Display Configuration 3	(0-0xffff)	0xffff	There are multiple options for it and options can selected to display separately or together.
30.	ECU Data Display Configuration 4	(0-0xffff)	0xffff	There are multiple options for it and options can selected to display separately or together.
31.	ECU Data Display Configuration 5	(0-0xffff)	0xffff	There are multiple options for it and options can selected to display separately or together.
32.	Charger D+ Selection	(0-1)	0	0: Controller; 1: ECU.
33.	Speed Sampling Selection	(0-1)	1	0: Controller; 1: ECU.

SmartGen

No.	Items	Parameters	Defaults	Description
34.	Engine Temp. Correlation Sensor	(0-7)	0	0: Sensor 1; 1: Sensor 2; 2: Sensor 3; 3: Sensor 4; 4: Sensor 5; 5: Sensor 6; 6: ECU Temperature; 7: ECU Oil Pressure
35.	Engine Oil Pressure Correlation Sensor	(0-7)	2	
Generator Setting				
1.	AC System	(0-3)	0	0: 3P4W; 1: 3P3W; 2: 2P3W; 3: 1P2W.
2.	Poles	(2-64)	4	Numbers of generator pole, used for calculating engine speed when there is no speed sensor.
3.	Rated Voltage	(30-30000)V	230	To offer standards for detecting of gen over/under voltage and loading voltage. (It is primary voltage when using voltage transformer; it is wire voltage when AC system is 3P3W while it is phase voltage when using other AC system).
4.	Loading Voltage	(0-200.0)%	90.0	Percentage of generator rated voltage. Controller detects when it is ready to take load, if the generating voltage is below loading voltage, it will not enter normal running period.
5.	Gen Rated Freq.	(10.0-75.0)Hz	50.0	Offer standards for detecting over/under/load frequency.
6.	Loading Frequency	(0-200.0)%	90.0	Percentage of generator rated frequency; when generator frequency is under load frequency, it will not enter normal running.
7.	Volt. Trans.(PT)	(0-1) (30-30000) (30-1000)	0 100 100	0: Disable; 1:Enable Primary voltage is PT's primary voltage. Secondary voltage is PT's secondary voltage.
8.	Gen Over Volt 1 Set	(0-1) (0-200.0)% (0-200.0)% (0-3600)s (0-7)	1 120.0 118.0 3 7	0: Disable 1: Enable Set value is gen rated volt percentage. Return value is gen rated volt percentage. Delay value Action
9.	Gen Over Volt 2 Set	(0-1) (0-200.0)% (0-200.0)% (0-3600)s (0-7)	1 110.0 108.0 5 1	0: Disable 1: Enable Set value is gen rated volt percentage. Return value is gen rated volt percentage. Delay value Action
10.	Gen Under Volt 1 Set	(0-1) (0-200.0)% (0-200.0)%	1 80.0 82.0	0: Disable 1: Enable Set value is gen rated volt percentage. Return value is gen rated volt percentage.

No.	Items	Parameters	Defaults	Description
		(0-3600)s (0-7)	3 7	Delay value Action
11.	Gen Under Volt 2 Set	(0-1) (0-200.0)% (0-200.0)% (0-3600)s (0-7)	1 84.0 86.0 5 1	0: Disable 1: Enable Set value is gen rated volt percentage. Return value is gen rated volt percentage. Delay value Action
12.	Gen Over Freq. 1 Set	(0-1) (0-200.0)% (0-200.0)% (0-3600)s (0-7)	1 114.0 112.0 2 7	0: Disable 1: Enable Set value is gen rated freq. percentage. Return value is gen rated freq. percentage. Delay value Action
13.	Gen Over Freq. 2 Set	(0-1) (0-200.0)% (0-200.0)% (0-3600)s (0-7)	1 110.0 108.0 5 1	0: Disable 1: Enable Set value is gen rated freq. percentage. Return value is gen rated freq. percentage. Delay value Action
14.	Gen Under Freq. 1 Set	(0-1) (0-200.0)% (0-200.0)% (0-3600)s (0-7)	1 80.0 82.0 3 7	0: Disable 1: Enable Set value is gen rated freq. percentage. Return value is gen rated freq. percentage. Delay value Action
15.	Gen Under Freq. 2 Set	(0-1) (0-200.0)% (0-200.0)% (0-3600)s (0-7)	1 84.0 86.0 5 1	0: Disable 1: Enable Set value is gen rated freq. percentage. Return value is gen rated freq. percentage. Delay value Action
16.	Harmonic Display	(0-1)	0	0: Disable 1: Enable
17.	Volt Unbalance 1	(0-1) (0-200.0)% (0-200.0)% (0-3600)s (0-7)(0-1)	1 10.0 5.0 5 1	0: Disable 1: Enable Set value is voltage unbalance degree. Return value is voltage unbalance degree. Delay value Action
18.	Volt Unbalance 2	(0-1) (0-200.0)% (0-200.0)% (0-3600)s (0-7)	0 10.0 5.0 5 0	0: Disable 1: Enable Set value is voltage unbalance degree. Return value is voltage unbalance degree. Delay value Action
19.	THD Alarm 1	(0-1) (0-200.0)% (0-200.0)% (0-3600)s (0-7)	0 10.0 5.0 5 0	0: Disable 1: Enable Set value is voltage distortion degree. Return value is voltage distortion degree. Delay value Action

SmartGen

No.	Items	Parameters	Defaults	Description
20.	THD Alarm 2	(0-1) (0-200.0)% (0-200.0)% (0-3600)s (0-7)	0 10.0 5.0 5 0	0: Disable 1: Enable Set value is voltage distortion degree. Return value is voltage distortion degree. Delay value Action
21.	CT Ratio	(5-6000)/5	500	Ratio of external connected current transformer.
22.	Rated Current	(5-6000)A	500	It is rated current of generator and used for loading current standard.
23.	Over Current 1	(0-1) (0-200.0)% (0-200.0)% (0-3600)s (0-7)	1 120.0 118.0 3 6	0: Disable 1: Enable Set value is percentage of rated current. Return value is percentage of rated current. Delay value Action
24.	Over Current 2	(0-1) (0-200.0)% (0-200.0)% (0-3600)s (0-7)	1 110.0 108.0 5 1	0: Disable 1: Enable Set value is percentage of rated current. Return value is percentage of rated current. Delay value Action
25.	Unbalanced Current 1	(0-1) (0-200.0)% (0-200.0)% (0-3600)s (0-7)	1 20.0 18.0 5 1	0: Disable 1: Enable Set value is percentage of rated current. Return value is percentage of rated current. Delay value Action
26.	Unbalanced Current 2	(0-1) (0-200.0)% (0-200.0)% (0-3600)s (0-7)	0 20.0 18.0 5 0	0: Disable 1: Enable Set value is percentage of rated current. Return value is percentage of rated current. Delay value Action
27.	Ground Fault 1	(0-1) (0-200.0)% (0-200.0)% (0-3600)s (0-7)	1 20.0 18.0 5 1	0: Disable 1: Enable Set value is percentage of rated current. Return value is percentage of rated current. Delay value Action
28.	Ground Fault 2	(0-1) (0-200.0)% (0-200.0)% (0-3600)s (0-7)	0 20.0 18.0 5 0	0: Disable 1: Enable Set value is percentage of rated current. Return value is percentage of rated current. Delay value Action
29.	Rated Active Power	(0-6000)kW	276	Genset rated active power, which is standard of loading active power.
30.	Rated Reactive Power	(0-6000)kvar	210	Genset rated reactive power, which is standard of loading reactive power.

SmartGen

No.	Items	Parameters	Defaults	Description
31.	Loading Slope	(0-100.0)%/s	3.0	Loading slope delay point power of every genset load setting, after the pre-set loading delay, genset will continue to load to the target power according to the pre-set slope.
32.	Loading Slope Delay Point	(0.1-40.0)%	10.0	
33.	Loading Slope Delay	(0-30)s	0	
34.	Unloading Slope	(0-100.0)%/s	3.0	Genset unloading rate.
35.	Over Power 1 Set	(0-1) (0-200.0)% (0-200.0)% (0-3600)s (0-7)	1 120.0 118.0 3 6	0: Disable 1: Enable Set value is percentage of rated active power. Return value is percentage of rated active power. Delay value Action
36.	Over Power 2 Set	(0-1) (0-200.0)% (0-200.0)% (0-3600)s (0-7)	1 110.0 108.0 5 1	0: Disable 1: Enable Set value is percentage of rated active power. Return value is percentage of rated active power. Delay value Action
37.	Reverse Power 1 Set	(0-1) (0-200.0)% (0-200.0)% (0-3600)s (0-7)	1 10.0 8.0 3 7	0: Disable 1: Enable Set value is percentage of rated active power. Return value is percentage of rated active power. Delay value Action
38.	Reverse Power 2 Set	(0-1) (0-200.0)% (0-200.0)% (0-3600)s (0-7)	1 5.0 3.0 5 1	0: Disable 1: Enable Set value is percentage of rated active power. Return value is percentage of rated active power. Delay value Action
39.	Loss of Excitation Fault 1	(0-1) (0-200.0)% (0-200.0)% (0-3600)s (0-7)	1 20.0 18.0 5 1	0: Disable 1: Enable Set value is percentage of rated reactive power. Return value is percentage of rated reactive power. Delay value Action
40.	Loss of Excitation Fault 2	(0-1) (0-200.0)%	1 20.0	0: Disable 1: Enable Set value is percentage of rated reactive

No.	Items		Parameters	Defaults	Description
			(0-200.0)% (0-3600)s (0-7)	18.0 5 0	power. Return value is percentage of rated reactive power. Delay value Action
41.	Power Factor Low 1		(0-1) (0-1.00) (0-1.00) (0-3600)s (0-7)	1 0.70 0.75 5 1	0: Disable 1: Enable Set value is gen power factor. Set value is gen power factor. Delay value Action
42.	Power Factor Low 2		(0-1) (0-1.00) (0-1.00) (0-3600)s (0-7)	0 0.70 0.75 5 0	0: Disable 1: Enable Set value is gen power factor. Set value is gen power factor. Delay value Action
Switch Setting					
1.	Close Time		(0-20.0)s	5.0	Pulse width of switch on. When it is 0, it means output constantly.
2.	Open Time		(0-20.0)s	3.0	Pulse width of switch off. When it is 0, it means output constantly.
3.	Check Time		(0-20.0)s	5.0	Feedback and check time of breaker close status input.
Analog Sensor Setting					
1.	Flex. Sensor 1 Set	Engine Temp.	(0-4) (0-15) (0-7)	1 8 1	Sensor type Sensor curve type Open action
		Over Alarm 1	(0-1) ((-50)-1000)°C ((-50)-1000)°C (0-3600)s (0-7)	1 98 96 3 7	0: Disable 1: Enable Set value is engine temperature value. Set value is engine temperature value. Delay value Action
		Over Alarm 2	(0-1) ((-50)-1000)°C ((-50)-1000)°C (0-3600)s (0-7)	1 95 93 5 1	0: Disable 1: Enable Set value is engine temperature value. Set value is engine temperature value. Delay value Action
		Under Alarm 1	(0-1) ((-50)-1000)°C ((-50)-1000)°C (0-3600)s (0-7)	0 70 75 5 1	0: Disable 1: Enable Set value is engine temperature value. Set value is engine temperature value. Delay value Action
		Under Alarm 2	(0-1) ((-50)-1000)°C	0 70	0: Disable 1: Enable Set value is engine temperature value.

No.	Items		Parameters	Defaults	Description
			((-50)-1000)°C (0-3600)s (0-7)	75 5 1	Set value is engine temperature value. Delay value Action
2.	Flex. Sensor 2 Set	Engine Fuel Level	(0-4) (0-15) (0-7)	3 0 0	Sensor type Sensor curve type Open action
		Over Alarm 1	(0-1) ((-50)-1000)% ((-50)-1000)% (0-3600)s (0-7)	0 100 90 5 1	0: Disable 1: Enable Set value is engine fuel level value. Set value is engine fuel level value. Delay value Action
		Over Alarm 2	(0-1) ((-50)-1000)% ((-50)-1000)% (0-3600)s (0-7)	0 90 80 5 1	0: Disable 1: Enable Set value is engine fuel level value. Set value is engine fuel level value. Delay value Action
		Under Alarm 1	(0-1) ((-50)-1000)% ((-50)-1000)% (0-3600)s (0-7)	0 70 75 5 1	0: Disable 1: Enable Set value is engine fuel level value. Set value is engine fuel level value. Delay value Action
		Under Alarm 2	(0-1) ((-50)-1000)% ((-50)-1000)% (0-3600)s (0-7)	0 70 75 5 1	0: Disable 1: Enable Set value is engine fuel level value. Set value is engine fuel level value. Delay value Action
3.	Flex. Sensor 3 Set	Engine Oil Pressure	(0-4) (0-15) (0-7)	2 8 1	Sensor type Sensor curve type Open action
		Over Alarm 1	(0-1) ((-50)-1000)kPa ((-50)-1000)kPa (0-3600)s (0-7)	0 1000 900 5 1	0: Disable 1: Enable Set value is engine oil pressure value. Set value is engine oil pressure value. Delay value Action
		Over Alarm 2	(0-1) ((-50)-1000)kPa ((-50)-1000)kPa (0-3600)s (0-7)	0 900 800 5 1	0: Disable 1: Enable Set value is engine oil pressure value. Set value is engine oil pressure value. Delay value Action
		Under Alarm 1	(0-1) ((-50)-1000)kPa ((-50)-1000)kPa (0-3600)s	1 103 117 2	0: Disable 1: Enable Set value is engine oil pressure value. Set value is engine oil pressure value. Delay value

SmartGen

No.	Items		Parameters	Defaults	Description
			(0-7)	7	Action
		Under Alarm 2	(0-1) ((-50)-1000)kPa ((-50)-1000)kPa (0-3600)s (0-7)	1 124 138 5 1	0: Disable 1: Enable Set value is engine oil pressure value. Set value is engine oil pressure value. Delay value Action
4.	Flex. Sensor 4 Set		(0-4) (0-15) (0-7)	0 0 0	Sensor type Sensor curve type Open action
5.	Flex. Sensor 5 Set		0-4) (0-15) (0-7)	0 0 0	Sensor type Sensor curve type Open action
6.	Flex. Sensor 6 Set		0-4) (0-15) (0-7)	0 0 0	Sensor type Sensor curve type Open action
7.	ECU Water Temp. Sensor	High Alarm 1 Set	(0-1) (0-7) ((-50)-300)℃ ((-50)-300)℃ (0-3600)s	1 7 98 96 3	0: Disable 1: Enable (over alarm 1) Action Set value is the temperature of ECU water temperature sensor. Set value is the temperature of ECU water temperature sensor. Delay value
		High Alarm 2 Set	(0-1) (0-7) ((-50)-300)℃ ((-50)-300)℃ (0-3600)s	1 1 95 93 5	0: Disable 1: Enable (over alarm 2) Action Set value is the temperature of ECU water temperature sensor. Set value is the temperature of ECU water temperature sensor. Delay value
		Low Alarm 1 Set	(0-1) (0-7) ((-50)-300)℃ ((-50)-300)℃ (0-3600)s	0 1 70 75 5	0: Disable 1: Enable (under alarm 1) Action Set value is the temperature of ECU water temperature sensor. Set value is the temperature of ECU water temperature sensor. Delay value
		Low Alarm 2 Set	(0-1) (0-7) ((-50)-300)℃ ((-50)-300)℃ (0-3600)s	0 1 70 75 5	0: Disable 1: Enable (under alarm 2) Action Set value is the temperature of ECU water temperature sensor. Set value is the temperature of ECU water temperature sensor. Delay value

SmartGen

No.	Items		Parameters	Defaults	Description
8.	ECU Oil Pressure Sensor	High Alarm 1 Set	(0-1) (0-7) (0-1000)kPa (0-1000)kPa (0-3600)s	0 7 100 90 5	0: Disable 1: Enable (over alarm 1) Action Set value is the oil pressure of ECU oil pressure sensor. Set value is the oil pressure of ECU oil pressure sensor. Delay value
		High Alarm 2 Set	(0-1) (0-7) (0-1000)kPa (0-1000)kPa (0-3600)s	0 1 90 80 5	0: Disable 1: Enable (over alarm 2) Action Set value is the oil pressure of ECU oil pressure sensor. Set value is the oil pressure of ECU oil pressure sensor. Delay value
		Low Alarm 1 Set	(0-1) (0-7) (0-1000)kPa (0-1000)kPa (0-3600)s	1 7 103 117 2	0: Disable 1: Enable (under alarm 1) Action Set value is the oil pressure of ECU oil pressure sensor. Set value is the oil pressure of ECU oil pressure sensor. Delay value
		Low Alarm 2 Set	(0-1) (0-7) (0-1000)kPa (0-1000)kPa (0-3600)s	1 1 124 138 5	0: Disable 1: Enable (under alarm 2) Action Set value is the oil pressure of ECU oil pressure sensor. Set value is the oil pressure of ECU oil pressure sensor. Delay value
9.	Heater Correlation Sensor		(0-7)	0	0: Sensor 1; 1: Sensor 2; 2: Sensor 3; 3: Sensor 4; 4: Sensor 5; 5: Sensor 6; 6: ECU Temperature; 7: ECU Oil Pressure
10.	Cooler Correlation Sensor		(0-7)	0	
11.	Fuel Pump Correlation Sensor		(0-7)	1	
12.	Heater Control		(0-1) ((-50)-300)℃ ((-50)-300)℃ (0-3600)min	1 50 55 60	0: Disable 1: Enable Set heater on temperature Set heater off temperature Set max heating time
13.	Cooler Control		(0-1) ((-50)-300)℃ ((-50)-300)℃ (0-3600)min	0 80 75 60	0: Disable 1: Enable Set cooler on temperature Set cooler off temperature Set max cooling time
14.	Fuel Pump Output		(0-1)	0	0: Disable 1: Enable

No.	Items		Parameters	Defaults	Description
			(0-100)% (0-100)% (0-3600)s	10 80 60	Set fuel pump on Set fuel pump off Set max output delay value of fuel pump
15.	Fuel Tank Capacity		(0-1) (0-6000.0)L	0 1000.0	0: Disable 1: Enable Fuel tank capacity
16.	Fuel Consumption Set		(0-1)	0	0: Disable 1: Enable
17.	Fuel Consump. Curve Content	X0	(0-6000)kW	30	
		X1	(0-6000)kW	50	
		X2	(0-6000)kW	75	
		X3	(0-6000)kW	100	
		X4	(0-6000)kW	150	
		X5	(0-6000)kW	200	
		X6	(0-6000)kW	250	
		X7	(0-6000)kW	300	
		Y0	(0-999.9)L	7.8	
		Y1	(0-999.9)L	13.1	
		Y2	(0-999.9)L	19.7	
		Y3	(0-999.9)L	26.2	
		Y4	(0-999.9)L	39.4	
		Y5	(0-999.9)L	50.0	
		Y6	(0-999.9)L	65.6	
		Y7	(0-999.9)L	78.7	
Digital Input Ports Setting					
Digital Input Port 1					
1.	Contents Setting		(0-99)	31	Remote start (on demand).
2.	Active Type		(0-1)	0	0: Close 1: Open
Digital Input Port 2					
1.	Contents Setting		(0-99)	27	Low oil pressure shutdown input.
2.	Active Type		(0-1)	0	0: Close 1: Open
Digital Input Port 3					
1.	Contents Setting		(0-99)	26	High temperature shutdown input.
2.	Active Type		(0-1)	0	0: Close 1: Open
Digital Input Port 4					
1.	Contents Setting		(0-99)	13	Gen closed input.
2.	Active Type		(0-1)	0	0: Close 1: Open
Digital Input Port 5					
1.	Contents Setting		(0-99)	0	Users-defined.
2.	Active Type		(0-1)	0	0: Close 1: Open
3.	Active Range		(0-3)	3	0: From safety on 1: From starting 2: Always 3: Never
4.	Active Actions		(0-7)	4	0: None; 1: Warning; 2: Block; 3: Safety Trip;

No.	Items	Parameters	Defaults	Description
				4: Safety Trip and Stop; 5: Trip; 6: Trip and Stop; 7: Shutdown.
5.	Active Delay	(0-20.0)s	2.0	Time from detecting active to confirm.
6.	Description			LCD displays detailed contents when the input is active.
Digital Input Port 6				
1.	Contents Setting	(0-99)	44	Master choice.
2.	Active Type	(0-1)	0	0: Close 1: Open
Digital Input Port 7				
1.	Contents Setting	(0-99)	0	Users-defined.
2.	Active Type	(0-1)	0	0: Close 1: Open
3.	Active Range	(0-3)	3	0: From safety on 1: From starting 2: Always 3: Never
4.	Active Actions	(0-7)	4	0: None; 1: Warning; 2: Block; 3: Safety Trip; 4: Safety Trip and Stop; 5: Trip; 6: Trip and Stop; 7: Shutdown.
5.	Active Delay	(0-20.0)s	2.0	Time from detecting active to confirm.
6.	Description			LCD displays detailed contents when the input is active.
Digital Input Port 8				
1.	Contents Setting	(0-99)	0	User defined.
2.	Active Type	(0-1)	0	0: Close 1: Open
3.	Active Range	(0-3)	3	0: From safety on 1: From starting 2: Always 3: Never
4.	Active Actions	(0-7)	4	0: None; 1: Warning; 2: Block; 3: Safety Trip; 4: Safety Trip and Stop; 5: Trip; 6: Trip and Stop; 7: Shutdown.
5.	Active Delay	(0-20.0)s	2.0	Time from detecting active to confirm.
6.	Description			LCD displays detailed contents when the input is active.
Digital Input Port 9				
1.	Contents Setting	(0-99)	0	Users-defined.
2.	Active Type	(0-1)	0	0: Close 1: Open
3.	Active Range	(0-3)	3	0: From safety on 1: From starting 2: Always 3: Never
4.	Active Actions	(0-7)	4	0: None; 1: Warning; 2: Block; 3: Safety Trip; 4: Safety Trip and Stop; 5: Trip; 6: Trip and Stop; 7: Shutdown.
5.	Active Delay	(0-20.0)s	2.0	Time from detecting active to confirm
6.	Description			LCD displays detailed contents when the input is active.
Digital Input Port 10-20				

SmartGen

No.	Items	Parameters	Defaults	Description
1.	Contents Setting	(0-99)	0	Users-defined.
2.	Active Type	(0-1)	0	0: Close 1: Open
3.	Active Range	(0-3)	3	0: From safety on 1: From starting 2: Always 3: Never
4.	Active Actions	(0-7)	4	0: None; 1: Warning; 2: Block; 3: Safety Trip; 4: Safety Trip and Stop; 5: Trip; 6: Trip and Stop; 7: Shutdown.
5.	Active Delay	(0-20.0)s	2.0	Time from detecting active to confirm.
6.	Description			LCD displays detailed contents when the input is active.
Digital Input Port 21-26				
1	Contents Setting	(0~99)	0	Users-defined.
2	Active Type	(0~1)	0	0: Close 1: Open
Digital Output Ports				
Digital Output Port 1				
1	Contents Setting	(0-309)	34	Fuel relay output.
2	Active Type	(0-1)	0	0: Normally open; 1: Normally close
Digital Output Port 2				
1	Contents Setting	(0-309)	33	Start relay output.
2	Active Type	(0-1)	0	0: Normally open; 1: Normally close
Digital Output Port 3				
1	Contents Setting	(0-309)	44	Normal generation output.
2	Active Type	(0-1)	0	0: Normally open; 1: Normally close
Digital Output Port 4				
1	Contents Setting	(0-309)	48	Common alarm.
2	Active Type	(0-1)	0	0: Normally open; 1: Normally close
Digital Output Port 5				
1	Contents Setting	(0-309)	38	Energize to stop.
2	Active Type	(0-1)	0	0: Normally open; 1: Normally close
Digital Output Port 6				
1	Contents Setting	(0-309)	35	Idle control.
2	Active Type	(0-1)	0	0: Normally open; 1: Normally close
Digital Output Port 7				
1	Contents Setting	(0-309)	29	Close gen output.
2	Active Type	(0-1)	0	0: Normally open; 1: Normally close
Digital Output Port 8				
1	Contents Setting	(0-309)	30	Open gen output
2	Active Type	(0-1)	0	0: Normally open; 1: Normally close
Digital Output Port 9-20				
1	Contents Setting	(0-309)	0	Not used.
2	Active Type	(0-1)	0	0: Normally open; 1: Normally close
Scheduled Run				

SmartGen

No.	Items	Parameters	Defaults	Description
1	Scheduled Run	(0-1)	0	0: Disable; 1: Enable Cycle selection (monthly, weekly, daily,), start time, continuous running time (0-30000min) and loading setting are available.
Scheduled Not Run				
1	Scheduled Not Run	(0-1)	0	0: Disable; 1: Enable Cycle selection (monthly, weekly, daily,), start time, continuous running time (0-30000min) and loading setting are available.
Maintenance Setting				
1	Maintenance 1 Set	(0-1)	0	0: Disable; 1: Enable Maintenance time, pre-alarm A and B time, corresponding maintenance time due action can be set.
2	Maintenance 2 Set	(0-1)	0	
3	Maintenance 3 Set	(0-1)	0	
Alternative Configuration				
1	Alt. Config. 1	(0-1)	0	0: Disable; 1: Enable Power supply system, rated voltage, rated frequency, rated speed, rated current, rated active power, rated reactive power, GOV SW1, AVR SW1 can be set.
2	Alt. Config. 2	(0-1)	0	0: Disable; 1: Enable
3	Alt. Config. 3	(0-1)	0	0: Disable; 1: Enable
4	Supply System	(0-3)	0	0: 3P4W; 1: 3P3W; 2: 2P3W; 3: 1P2W.
5	Rated Voltage	(30-30000)V	230	Provide standard for gen over/under voltage and loading voltage. If PT is fitted, it is the PT primary voltage. When 3P3W is applied, it is wire voltage; when other systems are applied, it is phase voltage.
6	Rated Frequency	(10.0-75.0)Hz	50.0	Provide standard for over/under frequency and loading frequency.
7	Rated Speed	(0-6000)r/min	1500	Provide standard for over/under speed and loading speed.
8	Rated Current	(5-6000)A	500	Generator rated current that is used for judging load current.
9	Rated Active Power	(0-6000)kW	276	Genset rated active power that is used for judging load active power.
10	Rated Reactive Power	(0-6000)kvar	210	Genset rated reactive power that is used for judging load reactive power.
11	GOV SW1	(-20.00-20.00)	0	Central voltage, default 0V.

No.	Items	Parameters	Defaults	Description
12	AVR SW1	(-20.00-20.00)	0	Central voltage, default 0V.
Synchronization Setting				
Auto Synchronization				
1	GOV Output Type	(0-1)	1	0: Internal relay; 1: Internal analog
2	GOV Reverse	(0-1)	0	0: Disable; 1: Enable
3	GOV Action	(0-2)	1	0: None; 1: Adjust rated frequency; 2: Adjust center point
4	AVR Output Type	(0-2)	2	0: None; 1: Internal relay; 2: Internal analog
5	AVR Reverse	(0-1)	0	0: Disable; 1: Enable
6	AVR Action	(0-2)	1	0: None; 1: Adjust rated voltage; 2: Adjust center point
Synchronization Check				
1	Dead Busbar Volt	(10-50)V	30	Busbar has no power when its voltage is lower than dead busbar voltage.
2	Sync. Volt Difference	(0-30)V	3	Voltage difference between gen and busbar. If it is lower than the synchronization voltage difference, voltage synchronization is considered.
3	Sync. Positive Freq. Difference	(0-2.00)Hz	0.20	Frequency difference between gen and busbar. If it is lower than the synchronization positive frequency difference, frequency synchronization is considered.
4	Sync. Negative Freq. Difference	(0-2.00)Hz	0.10	Frequency difference between gen and busbar. If it is lower than the synchronization positive frequency difference but greater than negative frequency difference, frequency synchronization is considered.
5	Sync. Phase Difference	(0-20)°	10	Initial phase difference between gen and busbar. If it is lower than synchronization phase difference, phase synchronization is considered.
6	Phase Offset	(0-360)°	0	Gen initial phase will add pre-set phase offset based on the sampling initial phase.
7	Sync. Failure Delay	(5.0-300.0)s	60.0	If sync signals are not detected during the set “Sync. Failure Delay”, controller will initiate corresponding alarms based on the “Sync. Failure Action”.
8	Sync. Failure Action	(0-7)	1	
Multi-set Synchronization				
1.	Num. On MSC Bus	(1-32)	2	It is the minimum MSC number.
2.	MSC Fail Act	(0-7)	1	0: None; 1: Warning; 2: Block; 3: Safety Trip; 4: Safety Trip and Stop; 5: Trip; 6: Trip and

SmartGen

No.	Items	Parameters	Defaults	Description
				Stop; 7: Shutdown.
3.	MSC Baud Rate	(0-3)	1	0: 500kBit/s; 1: 250kBit/s; 2: 125kBit/s; 3: 50kBit/s.
4.	Starting Option	(0-1)	1	0: Start all; 1: Start on demand
5.	Start All Time	(0-3600)s	120	When starting option is set as "start all", controller will stop corresponding gensets as required after delay.
6.	Balance Enable	(0-1)	0	0: Disable; 1: Enable
7.	Balance Hours	(1-1000)h	1	When the input is active, the controller will start/stop the genset automatically according to the running time and the pre-set balanced running time. **Balanced running gensets should be configured as the same priority.**
8.	Online Sets	(1-32)	1	Set the number of closed gensets on the bus.
9.	Scheduled Sets Mode	(0-1)	0	0: Gen power (%); 1: Available power.
10.	Scheduled Start PCT	(0-100)%	80	Load percentage of scheduling other gensets to start when start the genset on demand.
11.	Scheduled Stop PCT	(0-100)%	50	Load percentage of scheduling other gensets to stop when start the genset on demand.
12.	Scheduled Start Power	(0-6000)kW	200	Available power of scheduling other gensets to start when start the genset on demand.
13.	Scheduled Stop Power	(0-6000)kW	400	Available power of scheduling other gensets to stop when start the genset on demand.
14.	Freq. Coefficient	(0-200)%	10	It is frequency feedback coefficient in configuring active power distribution.
15.	Volt Coefficient	(0-200)%	10	It is voltage feedback coefficient in configuring reactive power distribution.
16.	Ground Relay Close Failure	(0-7)	7	0: None; 1: Warning; 2: Block; 3: Safety Trip; 4: Safety Trip and Stop; 5: Trip; 6: Trip and Stop; 7: Shutdown.
17.	Ground Relay Open Failure	(0-7)	1	0: None; 1: Warning; 2: Block; 3: Safety Trip; 4: Safety Trip and Stop; 5: Trip; 6: Trip and Stop; 7: Shutdown.
18.	Static Parallel Delay	(0-600)s	60	If static paralleling is not completed during "Static Parallel Delay", controller will initiate alarm.

No.	Items	Parameters	Defaults	Description
19.	Fuel Economy	(0-1)	0	0: Disable; 1: Enable **All gensets should configure the same fuel economy value.**
20.	Fuel Economy (%)	(0-100)%	60	It is the fuel economy percentage of genset.
21.	Economy Swap (W)	(0-6000)kW	200	Fuel economy starts exchange if difference value of the total rated power of the exchange gensets and the total power of the current loading gensets is greater than the set exchange power; otherwise, no exchange is performed.
22.	GOV Droop	(0-1)	0	0: Disable; 1: Enable
		(0-200.0)%	101.0	It is the percentage of no-load frequency and rated frequency.
		(0-200.0)%	100.0	It is the percentage of full-load frequency and rated frequency.
23.	AVR Droop	(0-1)	0	0: Disable; 1: Enable
		(0-200.0)%	101.0	It is the percentage of no-load voltage and rated voltage.
		(0-200.0)%	100.0	It is the percentage of full-load voltage and rated voltage.
24.	Close in Start All	(0-1)	1	0: Disable; 1: Enable When it is enabled, if “Start All” is selected, gensets will all start and close; When it is disabled, if “Start All” is selected, gensets will all start, but only one or multiple gensets will close (according to online sets number).
25.	Priority Change	(0-1)	0	0: Disable; 1: Enable When it is enabled, priority change will make corresponding gensets start/stop; When it is disabled, priority change will not influence gensets immediately. It will has effect when other gensets start/stop due to insufficient power and other reasons.
26.	Cycle Start	(0-1)	0	0: Disable; 1: Enable When it is enabled, the genset that starts and closes first will stop and open first; When it is disabled, it performs normal start/stop logic.
27.	Fast Start/Stop	(0-1)	0	0: Disable; 1: Enable
28.	Max Load PCT in Fast Start	(0-100)%	90	The load percentage of scheduling other gensets to fast start when start on demand.
29.	Min Load PCT in	(0-100)%	30	The load percentage of scheduling other

No.	Items	Parameters	Defaults	Description
	Fast Stop			gensets to fast stop when start on demand.
30.	Left Fast Start Power	(0-20000)kW	100	The available power of scheduling other gensets to fast start when start on demand.
31.	Left Fast Stop Power	(0-20000)kW	500	The available power of scheduling other gensets to fast stop when start on demand.
32.	Start All Limit	(1-32)	32	When "Start All" is selected, starting gensets are limited.
NEL Settings				
1.	NEL Number	(1-3)	3	Details of function description please see the following description.
2.	NEL Trip	(0-1)	0	
3.	NEL Trip Set Value 1	(0-200)%	90	
4.	NEL Trip Delay 1	(0-3600)s	5	
5.	NEL Trip Set Value 2	(0-200)%	100	
6.	NEL Trip Delay 2	(0-3600)s	1	
7.	NEL Auto Reconnect	(0-1)	0	
8.	NEL Auto Reconnect Set Value	(0-200)%	50	
9.	NEL Auto Reconnect Delay	(0-3600)s	5	
Dummy Load Setting				
1.	DL Number	(1-3)	3	Details of function description please see the following description.
2.	DL Connection	(0-1)	0	
3.	DL Connection Set Value 1	(0-200)%	20	
4.	DL Connection Delay 1	(0-3600)s	5	
5.	DL Connection Set Value 2	(0-200)%	10	
6.	DL Connection Delay 2	(0-3600)s	1	
7.	DL Auto Trip	(0-1)	0	
8.	DL Trip Set Value	(0-200)%	50	
9.	DL Trip Delay	(0-3600)s	5	
HC Setting				
1.	HC 1 Request Power	(0-6000)kW	400	Details of function description please see the following description.
2.	HC 1 Rated Power	(0-6000)kW	200	
3.	HC 1 Stable Delay	(0-3600)s	5	
4.	HC 1 Resp. Delay	(0-3600)s	5	
5.	HC 2 Request Power	(0-6000)kW	400	
6.	HC 2 Rated Power	(0-6000)kW	200	
7.	HC 2 Stable Delay	(0-3600)s	5	
8.	HC 2 Resp. Delay	(0-3600)s	5	

No.	Items	Parameters	Defaults	Description
Synchronous Calibration				
MSC				
1.	MSC ID	(0-31)	1	It is the ID in the MSC communication network, which indicates that the MSC ID in the entire communication network should be unique.
2.	Smart MSC ID	(0-1)	0	0: Disable; 1: Enable When it is enabled, the controller randomly selects an available ID based on the current bus unit ID at each power-up.
3.	Module Priority	(0-31)	0	Smaller the value, higher the priority.
Synchronous Control				
1.	Difference Freq.	(0-1.00)Hz	0.10	Adjust generator frequency so that gen frequency is the sum of busbar frequency and difference frequency. Phase synchronization adjustment is conducted when the sync difference frequency is set to 0.
2.	Sync Freq. (Volt)	(0-50000)%	20	Gain(P)
		(0-2000)%	20	Stability(I)
		(0-2000)%	0	Rate of change (D)
3.	Sync Freq. (Relay)	(0.01-4.00)Hz/s	1.20	Response
		(0.05-1.60)s	0.20	Stability
		(0-50000)%	10	Gain
		(0-10.0)%	1.0	Dead area
4.	Sync Volt (Volt)	(0-50000)%	20	Gain(P)
		(0-2000)%	20	Stability(I)
		(0-2000)%	0	Rate of change (D)
5.	Sync Volt (Relay)	(0.01-4.00)Hz/s	1.20	Response
		(0.05-1.60)s	0.20	Stability
		(0-50000)%	10	Gain
		(0-10.0)%	1.0	Dead area
6.	Sync Phase (Stable Time)	(0-20.0)s	2.0	Sync. confirmation time during phase sync adjustment
7.	Sync Phase (Volt)	(0-50000)%	20	Gain(P)
		(0-2000)%	20	Stability(I)
		(0-2000)%	0	Rate of change (D)
8.	Sync Phase (Relay)	(0.01-4.00)Hz/s	1.20	Response
		(0.05-1.60)s	0.20	Stability
		(0-50000)%	10	Gain
		(0-10.0)%	1.0	Dead area
Load Control				

smartgen

No.	Items	Parameters	Defaults	Description
1.	kW Control (Volt)	(0-50000)%	20	Gain(P)
		(0-2000)%	20	Stability(I)
		(0-2000)%	0	Rate of change (D)
2.	kW Control (Relay)	(0.01-4.00)Hz/s	1.20	Response
		(0.05-1.60)s	0.20	Stability
		(0-50000)%	10	Gain
		(0-10.0)%	1.0	Dead area
3.	kvar Control (Volt)	(0-50000)%	20	Gain(P)
		(0-2000)%	20	Stability(I)
		(0-2000)%	0	Rate of change (D)
4.	kvar Control (Relay)	(0.25-4.00)Hz/s	1.20	Response
		(0.05-1.60)s	0.20	Stability
		(0-50000)%	10	Gain
		(0-10.0)%	1.0	Dead area
Load				
1.	Load Minimum PCT	(0-100.0)%	1.0	It is the load percentage when the soft unload is opened.
2.	Load Mode	(0-3)	0	0: Gen Control; 1: Mains Control; 2: Load Takeover; 3: Load Control.
3.	Active Output Mode	(0-1)	0	0: Fixed Power; 1: Frequency-Power. It is active when Load mode is Gen control mode.
4.	Reactive Output Mode	(0-1)	0	0: Fixed Power; 1: Voltage-Power. It is active when Load mode is Gen control mode.
5.	Output Active Power	(0-100.0)%	30.0	It is used for load control.
6.	Output Reactive Power Option	(0-1)	0	0: kvar Reactive Power Control; 1: PF Power Factor Control.
7.	Output Reactive Power	(0-100.0)%	8.0	It is used for load control.
8.	Analog Adjust (kW)	(0-1)	0	0: Disable; 1: Enable. When it is enabled, flexible sensor 1 is used as analog input. It is active when active power output mode is configured as Fixed Power.
9.	Analog Adjust (kvar)	(0-1)	0	0: Disable; 1: Enable. When it is enabled, flexible sensor 2 is used as analog input. It is active when reactive power output mode is configured as Fixed Power.
10.	Active Output Curve			Configure gen frequency-active power curve.

No.	Items	Parameters	Defaults	Description
				It is active when active power output mode is configured as Frequency-Power.
11.	Reactive Output Curve			Configure gen voltage-reactive power curve. It is active when reactive power output mode is configured as Voltage-Power.
GOV/AVR				
1.	GOV SW1	(-20.00-20.00)	0	Central voltage, default 0V.
2.	GOV SW2	(0-20.00)	2.00	Voltage range, default (-2.5~+2.5V).
3.	AVR SW1	(-20.00-20.00)	0	Central voltage, default 0V.
4.	AVR SW2	(0-20.00)	2.0	Voltage range, default (-2.5~+2.5V).
Mains Setting				
1.	AC System	(0-3)	0	0: 3P4W; 1: 3P3W; 2: 2P3W; 3: 1P2W.
2.	Normal Delay	(0-3600)s	10	Confirm time from mains abnormal to normal.
3.	Abnormal Delay	(0-3600)s	5	Confirm time from mains normal to abnormal.
4.	Rated Voltage	(30-30000)V	230	Offer standards for detecting mains over/under voltage. It is primary voltage when voltage transformer is used. It is wire voltage when system is 3P3W while it is phase voltage when other systems are used.
5.	Mains Rated Frequency	(10.0-75.0)Hz	50.0	Offer standards for detecting over/under frequency.
6.	Mains Split Action	(0-1)	0	0: Trip and Stop; 1: Aux. Mains Failure.
7.	Voltage Transformer	(0-1) (30-30000) (30-1000)	0 100 100	0: Disable; 1: Enable Primary voltage. Secondary voltage.
8.	Mains Over Volt.	(0-1) (0-200.0)% (0-200.0)% (0-3600)s	1 120.0 116.0 5	Set value is percentage of mains rated voltage.
9.	Mains Under Volt.	(0-1) (0-200.0)% (0-200.0)% (0-3600)s	1 80.0 84.0 5	
10.	Mains Over Freq.	(0-1) (0-200.0)% (0-200.0)% (0-3600)s	0 114.0 110.0 5	Set value is percentage of mains rated frequency.
11.	Mains Under Freq.	(0-1) (0-200.0)%	0 90.0	

No.	Items	Parameters	Defaults	Description
		(0-200.0)% (0-3600)s	94.0 5	
12.	Mains ROCOF	(0-1) (0-1.00)Hz/s (0-20.0)s	1 0.20 0.1	Set value is frequency change rate of mains (ROCOF).
13.	Mains Vector Shift	(0-1) (0-20.0)° (0-20.0)s	1 6.0 0.1	Set value is phase angle's change rate of mains voltage waveform (VECTOR SHIFT).
14.	Mains Frequency	(5-6000)/5 (1-60000)kW (0-20.0)kvar (0-2)	500/5 345 258 0	Current transformer change. Rated active power. Rated reactive power. Mains CT phase 0: A Phase; 1: B Phase; 2: C Phase.
Mains Split Setting				
1.	Alarm Action	(0-1)	0	0: Trip and Stop; 1: Aux. Mains Failure.
2.	Mains ROCOF	(0-1.00)Hz/s (0-20.0)s	0.20 0.1	Set value is frequency change rate of mains (ROCOF), alarm action (default: trip and stop) and delay value (default: 0.1s) can be set.
3.	Mains Vector Shift	(0-20.0)° (0-20.0)s	6.0 0.1	Set value is phase angle's change rate of mains voltage waveform (VECTOR SHIFT), alarm action (default: trip and stop) and delay value (default: 0.1s) can be set.
4.	Mains Over Volt.	(0-200)% (0-20.0)s	110% 0.1	Set value is the percentage of mains rated voltage.
5.	Mains Under Volt.	(0-200)% (0-20.0)s	90% 0.1	
6.	Mains Over Freq.	(0-200)% (0-20.0)s	101% 0.1	Set value is the percentage of mains rated frequency.
7.	Mains Under Freq.	(0-200)% (0-20.0)s	99% 0.1	
Display Setting				
1.	Comm. Address	(1-254)	1	Controller address.
2.	Backlight Time	(1-3600)s	300	Controller backlight time.
3.	Brightness	(1-10)	10	Controller brightness.
4.	RS485 Comm.	(0-3) (0-1)	2 0	Baud rate 0: 2400; 1: 4800; 2: 9600; 3: 19200 Stop bit 0: 2-bit; 1: 1-bit
5.	Network Set	(0-1)	1	0: Disable; 1: Enable Set IP address, subnet mask, default gateway, DNS address, MAC address.
6.	Output Port	(0-1) (0-309)	0 0	Active type 0: Normally open; 1: Normally close

No.	Items	Parameters	Defaults	Description
				Function set

SmartGen

7.2 DEFINED CONTENTS OF DIGITAL OUTPUT PORTS

7.2.1 DEFINED CONTENTS OF DIGITAL OUTPUT PORTS

Table 20 Defined Contents of Digital Output Ports

No.	Type	Description
0	Not Used	
1	Custom Period 1	Details of function description please see the following description.
2	Custom Period 2	
3	Custom Period 3	
4	Custom Period 4	
5	Custom Period 5	
6	Custom Period 6	
7	Custom Combined 1	
8	Custom Combined 2	
9	Custom Combined 3	
10	Custom Combined 4	
11	Custom Combined 5	
12	Custom Combined 6	
13	Reserved	
14	Reserved	
15	Gas Choke On Control	Act in cranking, action time is the preset time for it.
16	Gas Ignition Control	Act when engine is starting, and disconnect when engine stops.
17	Air Flap Control	Act on over speed shutdown and emergence stop. Air inflow can be closed to stop the engine quickly.
18	Audible Alarm	Act on warning, shutdown, and trips. An annunciator can be connected externally. If “alarm mute” configurable input port is active, this is prohibited.
19	Louver Control	Act when genset is starting and disconnect when genset stops completely.
20	Fuel Pump Control	It is controlled by limit values of level sensor fuel pump.
21	Heater Control	It is controlled by heating limit values of temperature sensor.
22	Cooler Control	It is controlled by cooling limit values of temperature sensor.
23	Oil Pre-supply Output	Act from “crank on” to “safety on”.
24	Generator Excitation	Output in start process. If there is no generator frequency during high-speed running, it shall output for 2 seconds again.
25	Pre-Lubrication	Act from pre-heating to safety run.
26	Remote Control Output	This port is controlled by communication (PC).
27	Reserved	

No.	Type	Description
28	Sync. Indication	
29	Close Gen Output	It can control generating switch to take load.
30	Open Gen Output	It can control generating switch to take off load.
31	Close Mains Output	It can control mains switch to take load.
32	Open Mains Output	It can control mains switch to take off load.
33	Crank Relay	
34	Fuel Relay	Act when genset is starting and disconnect when stop is completed. When gas timer is enabled, fuel relay output is used to control gas valve.
35	Idle Control	It is used for genset with idling control. Close before starting and open in warming up delay; Close during stopping idle mode and open when stop is completed.
36	Speed Raise Output	Act during warming up time.
37	Speed Drop Output	Act between the period “stop idle” and “failed to stop”.
38	Energize to Stop	It is used for engines with ETS electromagnet. Close when stop idle is over and open when pre-set “ETS delay” is over.
39	Speed Drop Pulse	Act for 0.1s when controller enters “stop idle”, used for control parts of ECU drop to idle speed.
40	ECU Stop	Used for ECU engine and control its stop.
41	ECU Power	Used for ECU engine to control its power.
42	Speed Raise Pulse	Act for 0.1s when controller enters warming up delay; used for control parts of ECU raising to normal speed.
43	Crank Success	Close when a successful start signal is detected.
44	Gen OK	Act when generator is normally running.
45	Gen On-load	Act between normal running and high-speed cooling.
46	Mains OK	Act when mains supply is normally running.
47	Synchronizing	Act when controller is synchronizing.
48	Common Alarm	Act when genset common warning, common shutdown, common trip alarms occur.
49	Common Trip and Stop	Act when common trip and stop alarm occurs.
50	Common Shutdown	Act when common shutdown alarm occurs.
51	Common Trip	Act when common trip alarm occurs.
52	Common Warn	Act when common warning alarm occurs.
53	Common Block	
54	Battery Over Voltage	Act when battery’s over voltage warning alarm occurs.
55	Battery Under Voltage	Act when battery’s under voltage warning alarm occurs.
56	Charge Alternator Failure	Act when charging failure warning alarm occurs.
57	Common Safety Stop	
58	Common Safety Trip	
59	Reserved	
60	ECU Warning	Indicates ECU sends a warning signal.

SmartGen

No.	Type	Description
61	ECU Shutdown	Indicates ECU sends a shutdown signal.
62	ECU Comm. Failure	Indicates controller cannot communicate with ECU.
63	PWM Voltage Raise	When output type of AVR is set as “Relay Output”, controller adjusts generator voltage and reactive power via “Sync Voltage Raise” and “Sync Voltage Drop”.
64	PWM Voltage Drop	
65	PWM Speed Raise	When output type of GOV is set as “Relay Output”, controller adjusts engine speed and power via “Sync Speed Raise” and “Sync Speed Drop”.
66	PWM Speed Drop	
67	Reserved	
68	Reserved	
69	Input 1 Active	Act when input port 1 is active.
70	Input 2 Active	Act when input port 2 is active.
71	Input 3 Active	Act when input port 3 is active.
72	Input 4 Active	Act when input port 4 is active.
73	Input 5 Active	Act when input port 5 is active.
74	Input 6 Active	Act when input port 6 is active.
75	Input 7 Active	Act when input port 7 is active.
76	Input 8 Active	Act when input port 8 is active.
77	Input 9 Active	Act when input port 9 is active.
78	Input 10 Active	Act when input port 10 is active.
79	Input 11 Active	Act when input port 11 is active.
80	Input 12 Active	Act when input port 12 is active.
81	Exp. DI Input 1 Active	
82	Exp. DI Input 2 Active	
83	Exp. DI Input 3 Active	
84	Exp. DI Input 4 Active	
85	Exp. DI Input 5 Active	
86	Exp. DI Input 6 Active	
87	Exp. DI Input 7 Active	
88	Exp. DI Input 8 Active	
89	Exp. DI Input 9 Active	
90	Exp. DI Input 10 Active	
91	Exp. DI Input 11 Active	
92	Exp. DI Input 12 Active	
93	Exp. DI Input 13 Active	
94	Exp. DI Input 14 Active	
95	Exp. DI Input 15 Active	
96	Exp. DI Input 16 Active	
97-98	Reserved	
99	Emergency Stop	Act when emergency stop alarm occurs.
100	Fail to Start	Act when start failure alarm occurs.

No.	Type	Description
101	Fail to Stop	Act when stop failure alarm occurs.
102	Under Speed Warn	Act when under speed alarm occurs.
103	Under Speed Alarm	Act when under speed alarm (except warning) occurs.
104	Over Speed Warn	Act when over speed warning occurs.
105	Over Speed Alarm	Act when over speed alarm (except warning) occurs.
106	Reserved	
107	Reserved	
108	Reserved	
109	Gen Over Freq. Warn	Act when generator over frequency warning occurs.
110	Gen Over Freq. Alarm	Act when generator over frequency alarm (except warning) occurs.
111	Gen Over Volt Warn	Act when generator over voltage warning occurs.
112	Gen Over Volt Alarm	Act when generator over voltage alarm (except warning) occurs.
113	Gen Under Freq. Warn	Act when generator low frequency warning occurs.
114	Gen Under Freq. Alarm	Act when generator low frequency alarm (except warning) occurs.
115	Gen Under Volt. Warn	Act when generator low voltage warning occurs.
116	Gen Under Volt. Alarm	Act when generator low voltage alarm (except warning) occurs.
117	Gen Loss of Phase	Act when generator loss phase occurs.
118	Gen Reverse Phase Seq.	Act when generator reverse phase occurs.
119	Over Power Warn	Act when gen over power warning occurs.
120	Over Power Alarm	Act (except warning) when over power warning occurs.
121	Reverse Power Warn	Act when gen inverse power warning occurs.
122	Reverse Power Alarm	Act except warning) when controller detects generator have reverse power.
123	Over Current Warn	Act when over current warning occurs.
124	Over Current Alarm	Act when gen over current alarm (except warning) occurs.
125	Mains Blackout	
126	Mains Over Freq.	Act when mains over frequency occurs.
127	Mains Over Volt.	Act when mains over voltage occurs.
128	Mains Under Freq.	Act when mains under frequency occurs.
129	Mains Under Volt.	Act when mains under voltage occurs.
130	Mains Reverse Phase Seq.	Act when mains reverse phase occurs.
131	Mains Loss of Phase	Act when mains phase loses.
132	Reserved	
133	Reserved	
134	NEL1 Trip	Details of function description please see the following description.
135	NEL2 Trip	
136	NEL3 Trip	
137	Reserved	

No.	Type	Description
138	Flexible Sensor 1 High Warn	Act when controller has flexible sensor 1 high warning alarm.
139	Flexible Sensor 1 Low Warn	Act when controller has flexible sensor 1 low warning alarm.
140	Flexible Sensor 1 High Alarm	Act when controller has flexible sensor 1 high alarm (except warning).
141	Flexible Sensor 1 Low Alarm	Act when controller has flexible sensor 1 low alarm (except warning).
142	Flexible Sensor 2 High Warn	Act when controller has flexible sensor 2 high warning alarm.
143	Flexible Sensor 2 Low Warn	Act when controller has flexible sensor 2 low warning alarm.
144	Flexible Sensor 2 High Alarm	Act when controller has flexible sensor 2 high alarm (except warning).
145	Flexible Sensor 2 Low Alarm	Act when controller has flexible sensor 2 low alarm (except warning).
146	Flexible Sensor 3 High Warn	Act when controller has flexible sensor 3 high warning alarm.
147	Flexible Sensor 3 Low Warn	Act when controller has flexible sensor 3 low warning alarm.
148	Flexible Sensor 3 High Alarm	Act when controller has flexible sensor 3 high alarm (except warning).
149	Flexible Sensor 3 Low Alarm	Act when controller has flexible sensor 3 low alarm (except warning).
150	Flexible Sensor 4 High Warn	Act when controller has flexible sensor 4 high warning alarm.
151	Flexible Sensor 4 Low Warn	Act when controller has flexible sensor 4 low warning alarm.
152	Flexible Sensor 4 High Alarm	Act when controller has flexible sensor 4 high alarm (except warning).
153	Flexible Sensor 4 Low Alarm	Act when controller has flexible sensor 4 low alarm (except warning).
154	Flexible Sensor 5 High Warn	Act when controller has flexible sensor 5 high warning alarm.
155	Flexible Sensor 5 Low Warn	Act when controller has flexible sensor 5 low warning alarm.
156	Flexible Sensor 5 High Alarm	Act when controller has flexible sensor 5 high alarm (except warning).
157	Flexible Sensor 5 Low Alarm	Act when controller has flexible sensor 5 low alarm (except warning).
158	Flexible Sensor 6 High Warn	Act when controller has flexible sensor 6 high warning alarm.

No.	Type	Description
159	Flexible Sensor 6 Low Warn	Act when controller has flexible sensor 6 low warning alarm.
160	Flexible Sensor 6 High Alarm	Act when controller has flexible sensor 6 high alarm (except warning).
161	Flexible Sensor 6 Low Alarm	Act when controller has flexible sensor 6 low alarm (except warning).
162	Exp1 Ch15 High Alarm	Act when expansion 1 sensor 15 high alarm (except warning) occurs.
163	Exp1 Ch15 High Warn	Act when expansion 1 sensor 15 high warning occurs.
164	Exp1 Ch15 Low Alarm	Act when expansion 1 sensor 15 low alarm (except warning) occurs.
165	Exp1 Ch15 Low Warn	Act when expansion 1 sensor 15 low warning occurs.
166	Exp1 Ch16 High Alarm	Act when expansion 1 sensor 16 high alarm (except warning) occurs.
167	Exp1 Ch16 High Warn	Act when expansion 1 sensor 16 high warning occurs.
168	Exp1 Ch16 Low Alarm	Act when expansion 1 sensor 16 low alarm (except warning) occurs.
169	Exp1 Ch16 Low Warn	Act when expansion 1 sensor 16 low warning occurs.
170	Exp1 Ch17 High Alarm	Act when expansion 1 sensor 17 high alarm (except warning) occurs.
171	Exp1 Ch17 High Warn	Act when expansion 1 sensor 17 high warning occurs.
172	Exp1 Ch17 Low Alarm	Act when expansion 1 sensor 17 low alarm (except warning) occurs.
173	Exp1 Ch17 Low Warn	Act when expansion 1 sensor 17 low warning occurs.
174	Exp1 Ch18 High Alarm	Act when expansion 1 sensor 18 high alarm (except warning) occurs.
175	Exp1 Ch18 High Warn	Act when expansion 1 sensor 18 high warning occurs.
176	Exp1 Ch18 Low Alarm	Act when expansion 1 sensor 18 low alarm (except warning) occurs.
177	Exp1 Ch18 Low Warn	Act when expansion 1 sensor 18 low warning occurs.
178	Exp1 Ch19 High Alarm	Act when expansion 1 sensor 19 high alarm (except warning) occurs.
179	Exp1 Ch19 High Warn	Act when expansion 1 sensor 19 high warning occurs.
180	Exp1 Ch19 Low Alarm	Act when expansion 1 sensor 19 low alarm (except warning) occurs.
181	Exp1 Ch19 Low Warn	Act when expansion 1 sensor 19 low warning occurs.
182	Exp1 Ch20 High Alarm	Act when expansion 1 sensor 20 high alarm (except warning) occurs.
183	Exp1 Ch20 High Warn	Act when expansion 1 sensor 20 high warning occurs.
184	Exp1 Ch20 Low Alarm	Act when expansion 1 sensor 20 low alarm (except warning) occurs.
185	Exp1 Ch20 Low Warn	Act when expansion 1 sensor 20 low warning occurs.

SmartGen

No.	Type	Description
186	Exp1 Ch21 High Alarm	Act when expansion 1 sensor 21 high alarm (except warning) occurs.
187	Exp1 Ch21 High Warn	Act when expansion 1 sensor 21 high warning occurs.
188	Exp1 Ch21 Low Alarm	Act when expansion 1 sensor 21 low alarm (except warning) occurs.
189	Exp1 Ch21 Low Warn	Act when expansion 1 sensor 21 low warning occurs.
190	Exp1 Ch22 High Alarm	Act when expansion 1 sensor 22 high alarm (except warning) occurs.
191	Exp1 Ch22 High Warn	Act when expansion 1 sensor 22 high warning occurs.
192	Exp1 Ch22 Low Alarm	Act when expansion 1 sensor 22 low alarm (except warning) occurs.
193	Exp1 Ch22 Low Warn	Act when expansion 1 sensor 22 low warning occurs.
194	Exp1 Ch23 High Alarm	Act when expansion 1 sensor 23 high alarm (except warning) occurs.
195	Exp1 Ch23 High Warn	Act when expansion 1 sensor 23 high warning occurs.
196	Exp1 Ch23 Low Alarm	Act when expansion 1 sensor 23 low alarm (except warning) occurs.
197	Exp1 Ch23 Low Warn	Act when expansion 1 sensor 23 low warning occurs.
198	Exp1 Ch24 High Alarm	Act when expansion 1 sensor 24 high alarm (except warning) occurs.
199	Exp1 Ch24 High Warn	Act when expansion 1 sensor 24 high warning occurs.
200	Exp1 Ch24 Low Alarm	Act when expansion 1 sensor 24 low alarm (except warning) occurs.
201	Exp1 Ch24 Low Warn	Act when expansion 1 sensor 24 low warning occurs.
202	AIN8 Ch1 High Alarm	Act when AIN8 sensor 1 high alarm (except warning) occurs.
203	AIN8 Ch1 High Warn	Act when AIN8 sensor 1 high warning occurs.
204	AIN8 Ch1 Low Alarm	Act when AIN8 sensor 1 low alarm (except warning) occurs.
205	AIN8 Ch1 Low Warn	Act when AIN8 sensor 1 low warning occurs.
206	AIN8 Ch2 High Alarm	Act when AIN8 sensor 2 high alarm (except warning) occurs.
207	AIN8 Ch2 High Warn	Act when AIN8 sensor 2 high warning occurs.
208	AIN8 Ch2 Low Alarm	Act when AIN8 sensor 2 low alarm (except warning) occurs.
209	AIN8 Ch2 Low Warn	Act when AIN8 sensor 2 low warning occurs.
210	AIN8 Ch3 High Alarm	Act when AIN8 sensor 3 high alarm (except warning) occurs.
211	AIN8 Ch3 High Warn	Act when AIN8 sensor 3 high warning occurs.
212	AIN8 Ch3 Low Alarm	Act when AIN8 sensor 3 low alarm (except warning) occurs.
213	AIN8 Ch3 Low Warn	Act when AIN8 sensor 3 low warning occurs.

SmartGen

No.	Type	Description
214	AIN8 Ch4 High Alarm	Act when AIN8 sensor 4 high alarm (except warning) occurs.
215	AIN8 Ch4 High Warn	Act when AIN8 sensor 4 high warning occurs.
216	AIN8 Ch4 Low Alarm	Act when AIN8 sensor 4 low alarm (except warning) occurs.
217	AIN8 Ch4 Low Warn	Act when AIN8 sensor 4 low warning occurs.
218-219	Reserved	
220	DL1 Connect	Details of function description please see the following description.
221	DL2 Connect	
222	DL3 Connect	
223	Ground Relay Output	Details of function description please see the following description.
224	Redundancy Active	Details of function description please see the following description.
225	HC1 Response	Details of function description please see the following description.
226	HC2 Response	Details of function description please see the following description.
227-228	Reserved	
229	Remote Control Mode	Act when the system is in Remote Control Mode.
230	Stop Mode	Act when the system is in Stop Mode.
231	Manual Mode	Act when the system is in Manual Mode.
232	Test Mode	Act when the system is in Test Mode.
233	Auto Mode	Act when the system is in Auto Mode.
234	Gen Load Indication	
235	Mains Load Indication	
236-239	Reserved	
240-279	PLC Flag 1-40	PLC flag output.
280-293	Input 13-26 Active	
294	ECU Water Temp. High Warn	
295	ECU Water Temp. Low Warn	
296	ECU Water Temp. High Alarm	
297	ECU Water Temp. Low Alarm	
298	ECU OP High Warn	
299	ECU OP Low Warn	
300	ECU OP High Alarm	
301	ECU OP Low Alarm	
302-307	Flex. Sensor 1-6 Open	
308-309	Reserved	

SmartGen

7.2.2 DEFINED PERIOD OUTPUT

Defined period output is composed by 2 parts, **period output S1** and **condition output S2.**

While **S1** and **S2** are **TRUE** synchronously, OUTPUT;

While **S1** or **S2** is **FALSE**, NOT OUTPUT.

Period output S1 can set generator's one or more period output freely, can set the delayed time and output time after entering period.

Condition output S2 can set as any conditions in output ports.

NOTE: when delay time and output time both are 0 in period output S1, it is TRUE in this period.

For example:

Output period: start

Delay output time: 2s

Output time: 3s

Condition output contents: input port 1 is active

Close when condition output active/inactive: close when active (disconnect when inactive);

Input port 1 active, after enter "starts time" and delay 2s, this defined period output is outputting, after 3s, stop outputting;

Input port 1 inactive, defined output period is not outputting.

7.2.3 DEFINED COMBINATION OUTPUT

Defined combination output is composed by 3 parts, **or condition output S1, or condition output S2, and condition output S3**.

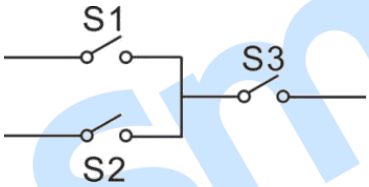

S1 or S2 is **TRUE**, and S3 is **TRUE**, defined combination output is outputting;

S1 and S2 are **FALSE**, or S3 is **FALSE**, defined combination output is not outputting.

NOTE: S1, S2, S3 can be set as any contents except for "defined combination output" in the output setting.

NOTE: 3 parts of defined combination output (S1, S2, S3) could not include or recursively include themselves.

For example:

Contents of or condition output S1: input port 1 is active;

Close when or condition output S1 is active/inactive: close when active (disconnect when inactive);

Contents of or condition output S2, input port 2 is active;

Close when or condition output S2 is active/inactive: close when active (disconnect when inactive);

Contents of and condition output S3: input port 3 is active;

Close when and condition output S3 is active/inactive: close when active (disconnect when inactive);

When input port 1 active or input port 2 active, if input port 3 is active, defined combination output is outputting; If input port 3 inactive, defined combination output is not outputting;

When input port 1 inactive and input port 2 inactive, whatever input port 3 is active or not, defined combination output is not outputting.

7.3 DEFINED CONTENTS OF DIGITAL INPUT PORTS

Table 21 Defined Contents of Digital Input Ports

No.	Type	Description
0	Users Configured	Users-defined alarm. Active range: Never: input inactive. Always: input is active all the time. From crank: detecting as soon as start. From safety on: detecting after safety on run delay.
1	Reserved	
2	Alarm Mute	Can prohibit "Audible Alarm" output when input is active.
3	Alarm Reset	Can reset shutdown alarm and trip alarm when input is active.
4	60Hz Active	Used for CANBUS engine and it is 60Hz when input is active.
5	Lamp Test	All LED indicators are illuminating when input is active.
6	Panel Lock	All keys on the panel are inactive except navigation and there is 🔒 in the right top corner in LCD.
7	Redundancy Active	
8	Idle Control Mode	Under voltage/frequency/speed protection is inactive.
9	Inhibit Auto Stop	In **Auto** mode, during generator normal running, when input is active, prohibit generator shutdown automatically.
10	Inhibit Auto Start	In **Auto** mode, prohibit generator start automatically when input is active.
11	Inhibit Scheduled Start	In **Auto** mode, prohibit scheduled start genset when input is active.
12	Inhibit Gen Close	When input is active and "Gen Close" needs to be output, "Gen Close" process will wait and will not close genset.
13	Gen Closed Input	Connect generator loading switch's auxiliary point.
14	Inhibit Gen On-load	Prohibit genset switch on when input is active.
15	Mains Closed Input	Connect mains loading switch's auxiliary point.
16	Inhibit Mains On-load	Prohibit mains switch on when input is active.
17	Auto Mode Lock	When input is active, controller enters Auto Mode.
18	Auto Mode Invalid	When input is active, controller will not work under Auto Mode. Auto key and simulate auto key input do not work.
19	Static Parallel Mode	
20	Black Start Input	
21	Inhibit Alarm Stop	All shutdown alarms are prohibited except emergence stop. (Means battle mode)
22	Instrument Mode	All outputs are prohibited in this mode.
23	Non-parallel Mode	
24	Reserved	
25	Reserved	
26	Aux. High Temp	Connected sensor digital input.
27	Aux. Low OP	Connected sensor digital input.

No.	Type	Description
28	Remote Start (On Load)	In **Auto** mode, when input is active, genset will start and take load after genset is OK; when input is inactive, genset will stop automatically.
29	Remote Start (Off Load)	In **Auto** mode, when input is active, genset will start without load after genset is OK; when input is inactive, genset will stop automatically.
30	Manual Start	In **Manual** mode, when input is active, genset will start automatically; when input is inactive, genset will stop automatically.
31	Remote Start (On Demand)	In **Auto** mode, when input is active, all gensets that need to be paralleled will start according to the priority and increase/decrease gensets according to the load.
32	Remote Start (Island)	
33	Simulate Stop key	An external button (not self-locking) can be connected and pressed as simulate panel.
34	Simulate Manual key	
35	Reserved	
36	Simulate Auto key	An external button (not self -locking) can be connected and pressed as simulate panel.
37	Simulate Start key	
38	Simulate Gen C/O key	This is simulate G-close key.
39	Simulate Mains C/O key	This is simulate G-open key.
40	NEL Manual Trip	An external button (Not Self-locking) can be connected. Details of function description please see the following.
41	NEL Manual Reconnect	
42	Power Management Mode	Power management mode will be displayed on the LCD when the input is active. In this mode, the controller will control genset synchronize, power sharing, start/stop scheduling, generator closed, generator opened but genset start or stop; and displayed in start phase of shield countdown, shield start outputs until the crank disconnect condition is satisfied; the fuel will not output in high-speed cooling and stop idle phases. Details of function description please see the following.
43	Mains Parallel Mode	The genset will output fixed power and not share load with other units when the input is active.
44	First Priority	It is the top priority when the input is active. Used for main/standby genset selection.
45	Simulate Mains OK	
46	Simulate Mains Abnormal	
47	Alternative Config. 1	The alternative configuration is active when the input is active. Users can set different parameters to make it easy to select current configuration via input port.
48	Alternative Config. 2	
49	Alternative Config. 3	
50	Balance Test	
51	Speed Raise	

No.	Type	Description
52	Speed Drop	
53	Voltage Raise	
54	Voltage Drop	
55	Reserved	
56	Low Level Shutdown	Connect with water level sensor digital input port.
57	Detonation Shutdown	Connect with detection module alarm input port.
58	Gas Leakage Shutdown	Connect with detection module alarm input port.
59	DL Manual Connect	An external button (Not Self-locking) can be connected. Details of function description please see the following.
60	DL Manual Trip	
61	HC1 Request	
62	HC1 Feedback	
63	HC2 Request	
64	HC2 Feedback	
65	Ground Relay Closed	
66	Auto Normal Mode	When the input is active, it enters the current mode. Genset with low running time (user accumulation B running time) will start with load, then open breaker and stop first.
67	Auto Battle Mode	When the input is active, it enters the current mode. All gensets start and close the breaker (if set all start limit, genset with low running time will start first according to running time (user accumulation B running time), gensets within the set number (all start limit) will all start). One or multiple gensets (based on online gensets number) will take load, and start/stop after running set time (all start time) according to load situation, genset will open breaker and stop according to load sequence.
68	Aftertreatment Inhibit Regenerate	
69	Aftertreatment Manual Regenerate	
70	Auto Normal Mode 2	When the input is active, it enters the current mode. Genset with top priority will start with load, then open breaker and stop first.
71	Auto Battle Mode 2	When the input is active, it enters the current mode. All gensets start and close the breaker (if set all start limit, genset with top priority will start first, gensets within the set number (all start limit) will all start). One or multiple gensets (based on online gensets number) will take load, and start/stop after running set time (all start time) according to load situation, genset will open breaker and stop according to load sequence.
72	Remote Control Mode	When the input is active, the controller is in the remote control mode, the genset stop/stop and switch close/open can be controlled via communication.
73	Reset Maint. 1 Time	

SmartGen

No.	Type	Description
74	Reset Maint. 2 Time	
75	Reset Maint. 3 Time	
76-99	Reserved	

SmartGen

7.4 SELECTION OF SENSORS

Table 22 Sensor Selection

No.	Items	Description	Remark
1	Temperature Sensor	0 Not Used 1 Custom Resist. Curve 2 Custom (4-20)mA curve 3 Custom (0-5)V curve 4 VDO 5 CURTIS 6 DATCON 7 SGX 8 SGD 9 SGH 10 PT100 11 SUSUKI 12 PRO 13-15 Reserved	Defined resistance's range is (0~6)kΩ.
2	Pressure Sensor	0 Not Used 1 Custom Resist. Curve 2 Custom (4-20)mA curve 3 Custom (0-5)V curve 4 VDO 10Bar 5 CURTIS 6 DATCON 10Bar 7 SGX 8 SGD 9 SGH 10 VDO 5Bar 11 DATCON 5Bar 12 DATCON 7Bar 13 SUSUKI 14 PRO 15 Reserved	Defined resistance's range is (0~6)kΩ.
3	Level Sensor	0 Not Used 1 Custom Resist. Curve 2 Custom (4-20)mA curve 3 Custom (0-5)V curve 4 SGD 5 SGH 6~15 Reserved	Defined resistance's range is (0~6)kΩ.

NOTE: User should make special declare when order controller if engine temperature sensor, fuel level sensor, flexible sensor 2, or flexible sensor 3 uses non-resistance sensor.

7.5 CONDITIONS OF CRANK DISCONNECT SELECTION

Table 23 Crank Disconnect Conditions

No.	Setting Description
0	Gen frequency
1	Speed
2	Speed sensor + Gen frequency
3	Oil pressure
4	Oil pressure + Gen frequency
5	Oil pressure + Speed sensor
6	Oil pressure + Speed sensor + Gen frequency

NOTES:

1) There are 3 conditions to make starter disconnected with engine, that is, speed sensor, generator frequency and engine oil pressure. They all can be used separately. We recommend that engine oil pressure should be used with speed sensor and generator frequency together, in order to make the starter motor separated with engine as soon as possible.

2) Speed is the signal collected by magnetic sensor that is the magnetic equipment installed in starter for detecting flywheel teeth.

3) When speed is selected, users must ensure that the number of flywheel teeth is the same with setting, otherwise, “over speed stop” or “under speed stop” may be caused.

4) If genset has no magnetic sensor, please do not select corresponding items, otherwise, “start failure” or “loss speed signal” may be caused.

5) If genset has no oil pressure sensor, please do not select corresponding items.

6) If speed is not selected in crank disconnect setting, the speed displayed on controller is calculated by generating signals.

SmartGen

7.6 ECU PARAMETER DISPLAY SETTING

Table 24 ECU Data Display

No.	Item	Setting Contents
1	ECU Data Display Configuration 1	0: Oil Temperature; 1: Fuel Temperature; 2: Fuel Pressure; 3: Coolant Level; 4: Coolant Pressure; 5: Exhaust Temperature; 6: Load Percentage; 7: Fuel Consumption; 8: Accumulated Fuel Consumption; 9: Oil Level; 10: Intercooler Temperature; 11: Turbocharger Oil Temperature; 12: Turbocharger Bypass Position; 13: Fuel Inlet Pressure; 14: Fuel Pressure Difference; 15: Throttle 1 Percentage.
2	ECU Data Display Configuration 2	0: Throttle 2 Percentage; 1: Intake Manifold Pressure; 2: Intake Manifold Temperature; 3: Inlet Pressure; 4: Air Filter Pressure Difference; 5: Exhaust Oxygen Content; 6: Turbocharger 1 Pressure; 7: Turbocharger 2 Pressure; 8: Atmospheric Pressure; 9: Atmospheric Temperature; 10: Inlet Temperature; 11: ECU Battery Voltage; 12: ECU Switch Voltage; 13: Fuel Valve 1 Position; 14: Fuel Valve 2 Position; 15: Accelerator Position.
3	ECU Data Display Configuration 3	0: DEF Level; 1: DEF Temperature; 2: DEF Supply; 3: DEF Supply Pressure; 4: DPF Soot; 5: DPF Ash;

SmartGen

No.	Item	Setting Contents
4	ECU Data Display Configuration 4	0: Cylinder 1 Temperature; 1: Cylinder 2 Temperature; 2: Cylinder 3 Temperature; 3: Cylinder 4 Temperature; 4: Cylinder 5 Temperature; 5: Cylinder 6 Temperature; 6: Cylinder 7 Temperature; 7: Cylinder 8 Temperature; 8: Cylinder 9 Temperature; 9: Cylinder 10 Temperature; 10: Cylinder 11 Temperature; 11: Cylinder 12 Temperature; 12: Cylinder 13 Temperature; 13: Cylinder 14 Temperature; 14: Cylinder 15 Temperature; 15: Cylinder 16 Temperature.
5	ECU Data Display Configuration 5	0: Cylinder 17 Temperature; 1: Cylinder 18 Temperature; 2: Cylinder 19 Temperature; 3: Cylinder 20 Temperature; 4: Engine Temperature; 5: Oil Pressure; 6: Charger D+.

8 PARAMETERS SETTING

CAUTION: Please change the controller internal parameters in standby mode (e.g., Start conditions selection, configurable input, digital output, various delay etc.), otherwise, alarming to stop and other abnormal conditions may happen.

NOTE: Maximum set value must over minimum set value in case that the condition of too high as well as too low will happen.

NOTE: When the warning alarm is set, please set the correct return value; otherwise, maybe there is abnormal alarm. When the maximum value is set, the return value must be less than the set value; when the minimum value is set, the return value must be over the set value.

NOTE: Please set the generator frequency value as low as possible when the genset is cranking, in order to make the starter be separated quickly as soon as crank disconnection happens.

NOTE: Digital input could not be set as the same items (except for user-defined); otherwise, there are abnormal functions. However, the digital output can be set as the same items.

9 SENSOR SETTING

1) When sensors are reselected, the sensor curves will be used again. For example, if default temperature sensor is SGX (120°C resistor type), its sensor curve is SGX (120°C resistor type); if select the SGH (120°C resistor type), the temperature sensor curve is SGH curve.

2) When there is difference between standard sensor curves and used sensor curves, users can adjust it in the “sensor curve type”.

3) When the sensor curve is inputted, x value (resistor) must be inputted from small to large, otherwise, mistake occurs.

4) If sensor type is selected as “none”, sensor curve is not working.

5) If the corresponding sensor has alarm switch only, users must set this sensor as “none”, otherwise, shutdown or warning may occur.

6) The headmost or backmost values in the vertical coordinates can be set as the same as below.

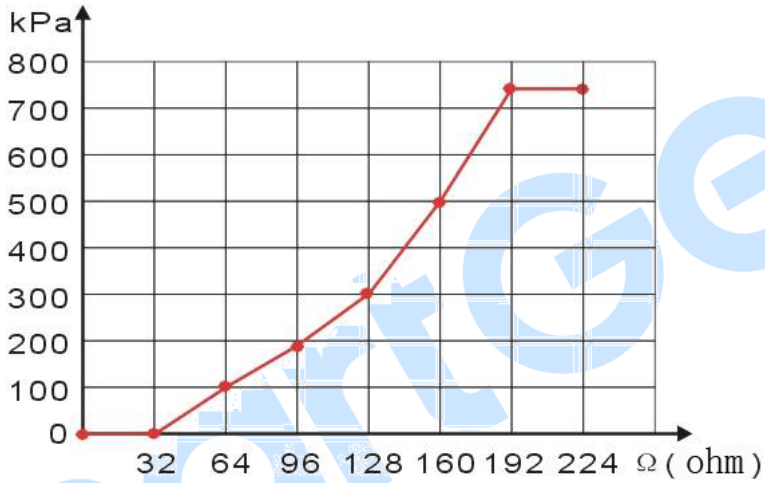

Fig.6 Sensor Curve Diagram

Table 25 Normal Pressure Unit Conversion

Item	N/m^2 Pa	kgf/cm^2	bar	psi
1Pa	1	1.02x10^{-5}	1x10^{-5}	1.45x10^{-4}
1kgf/cm^2	9.8x10^4	1	0.98	14.2
1bar	1x10^5	1.02	1	14.5
1psi	6.89x10^3	7.03x10^{-2}	6.89x10^{-2}	1

10 COMMISSIONING

10.1 STEP 1: SINGLE UNIT DEBUGGING

1) Check the parameter configurations of the controller;
2) Check the genset wiring connections and MSC CAN wiring connection between the units. (e.g. if 3 gensets are correctly connected, SYNC screen will display Module Number: 3);
3) In manual mode, check whether engine and generator data are normal;
4) In manual mode check whether switch open and close are normal;
5) In manual mode, after closing the breaker check whether generator frequency can be adjusted to the rated frequency (e.g. set the rated frequency as 52Hz/48Hz);
6) In manual mode, after closing the breaker check whether generator voltage can be adjusted to the rated voltage (e.g. set the rated voltage as 240V/220V);
7) Activate manual start on-load, and check whether power factor, active power and reactive power are normal; if negative value occurs, check phase sequences of generator voltage and current, the incoming line direction of current transformer, and secondary current dotted terminal of current transformer;
8) In manual mode do performance tests according to the national standards.

NOTE: Please refer to *HGM9500 SYNCHRONIZATION PLAN LIST* for more information on GOV and AVR settings.

10.2 STEP 2: NO-LOAD MANUAL PARALLEL

1) Manually close parallel sets, and check whether the parallel synchronization is stable and whether the close impulse current is too high;
2) After the genset is connected in parallel without load, check whether the current display has very big loop current;
3) After the genset is connected in parallel without load, observe whether the active power, reactive power outputs are “0”. If they are not 0, observe whether there is power oscillation; if there is power oscillation, users can properly modify the gain and stability values, or adjust the engine GOV or generator AVR gain and stability potentiometer, in order to avoid active and reactive power oscillation and make output close to 0.

10.3 STEP 3: ON-LOAD MANUAL PARALLEL

1) After the gensets are connected in parallel manually, perform on-load test and check whether active and reactive power are evenly distributed between all gensets;
2) After the gensets are connected in parallel manually, perform ramp on-load test to see if there is high overshoot or power oscillation during this period; if have, regulate load slope;
3) After the gensets are connected in parallel manually on-load, perform ramp off-load test to see if genset breaker opens after reaching minimum set value (%);
4) After the gensets are connected in parallel manually, perform impact load test and damp load test to check if there is power oscillation.

10.4 STEP 4: FULL AUTOMATIC PARALLEL

When the controller is in auto status, if digital input “remote start on-load (on demand)” is active, it will carry out full automatic parallel, start and stop operation. There are 3 ways of automatic parallel operation:

1) Start on demand: the module with top priority starts firstly. When load exceeds the pre-set start maximum percentage, the module with secondary priority will start. Synchronize the gensets and make them share load. When load is lower than the preset minimum stop percentage, after stop delay the secondary module breaker will be opened and the module will be cooled down and stopped.
2) Start all sets: all the modules start at the same time; the module that reaches load condition first will close first; when other modules reach load condition, they synchronize in parallel one by one. After that, the modules monitor the load. If load value falls below module pre-set shutdown minimum percentage, the module with lowest priority enters stop delay and then cools down and stops. If load exceeds the preset start maximum percentage, the gensets that are at rest will all start again.
3) Balanced engine running time: Engine with the low running time B starts first. When genset running time exceeds other gensets balanced running time B, the genset with the lowest running time starts (both “start on demand” or “start all sets” modes are possible); after other gensets are synchronized in parallel, breaker open and shut down are performed automatically. All gensets are circularly started and stopped according to balance running time.

SmartGen

11 TYPICAL APPLICATION

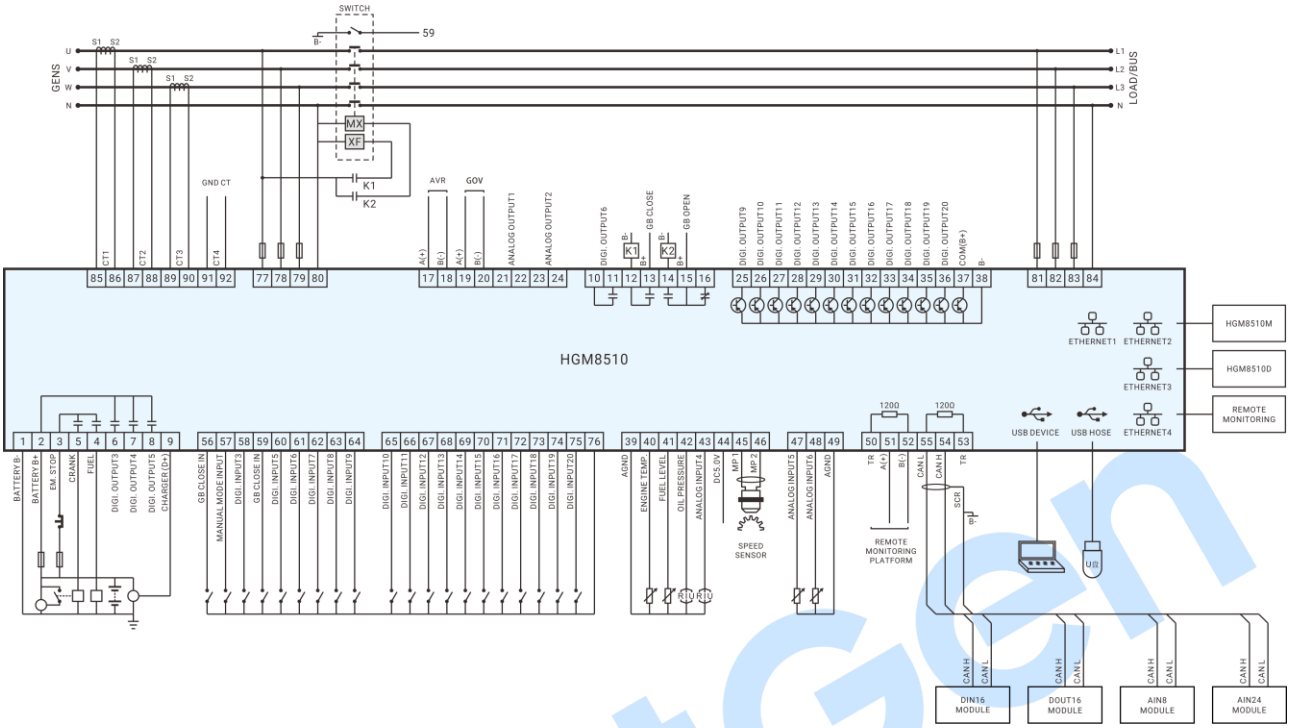

Fig.7 HGM8510 3-Phase 4-Wire Typical Application Diagram

NOTE: Fuse F1: min. 2A; max. 20A. Fuse F2: max. 32A. Users should select the suitable fuse depending on practical application.

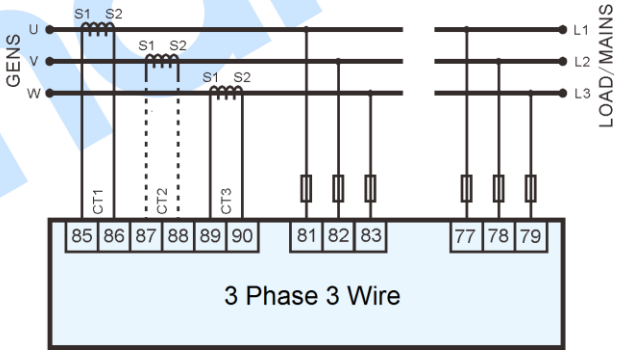

Fig.8 3-Phase 3-Wire Application Diagram

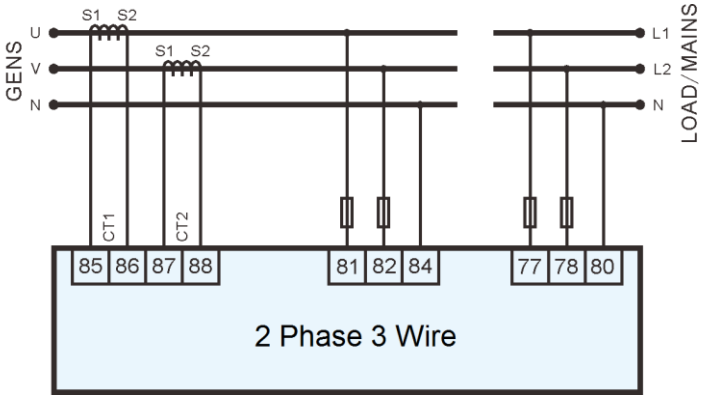

Fig.9 2-Phase 3-Wire Application Diagram

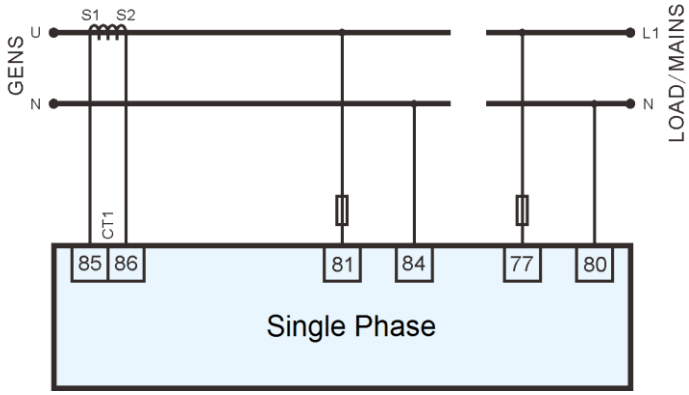

Fig.10 Single Phase Application Diagram

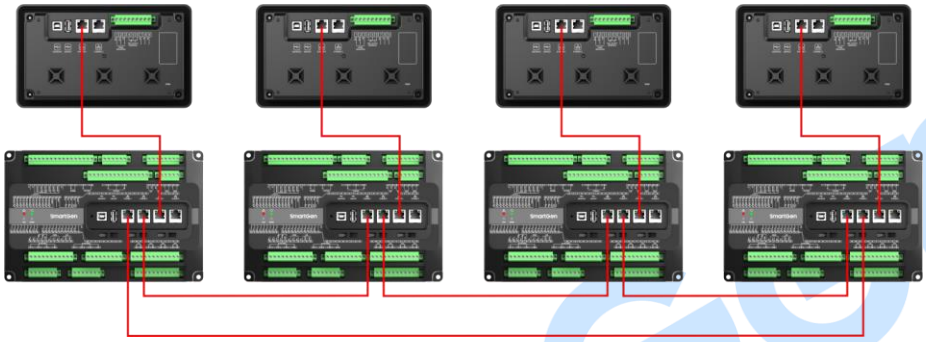

Fig.11 Communication Connection Diagram 1

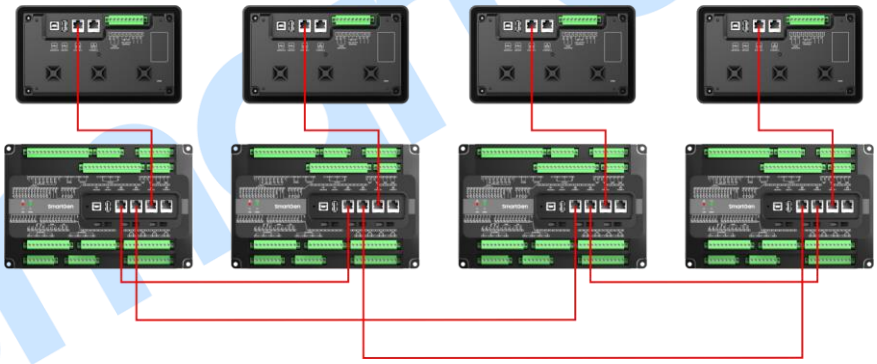

Fig.12 Communication Connection Diagram 2

NOTE: Mains parallel function for HGM8510 controller can be selected via digital input port. In mains parallel mode, generator will run in parallel with mains and it will only be able to output with fixed power. (Set load mode as gen control mode).

12 POWER MANAGEMENT MODE

Power management mode is to be selected via a digital input port.

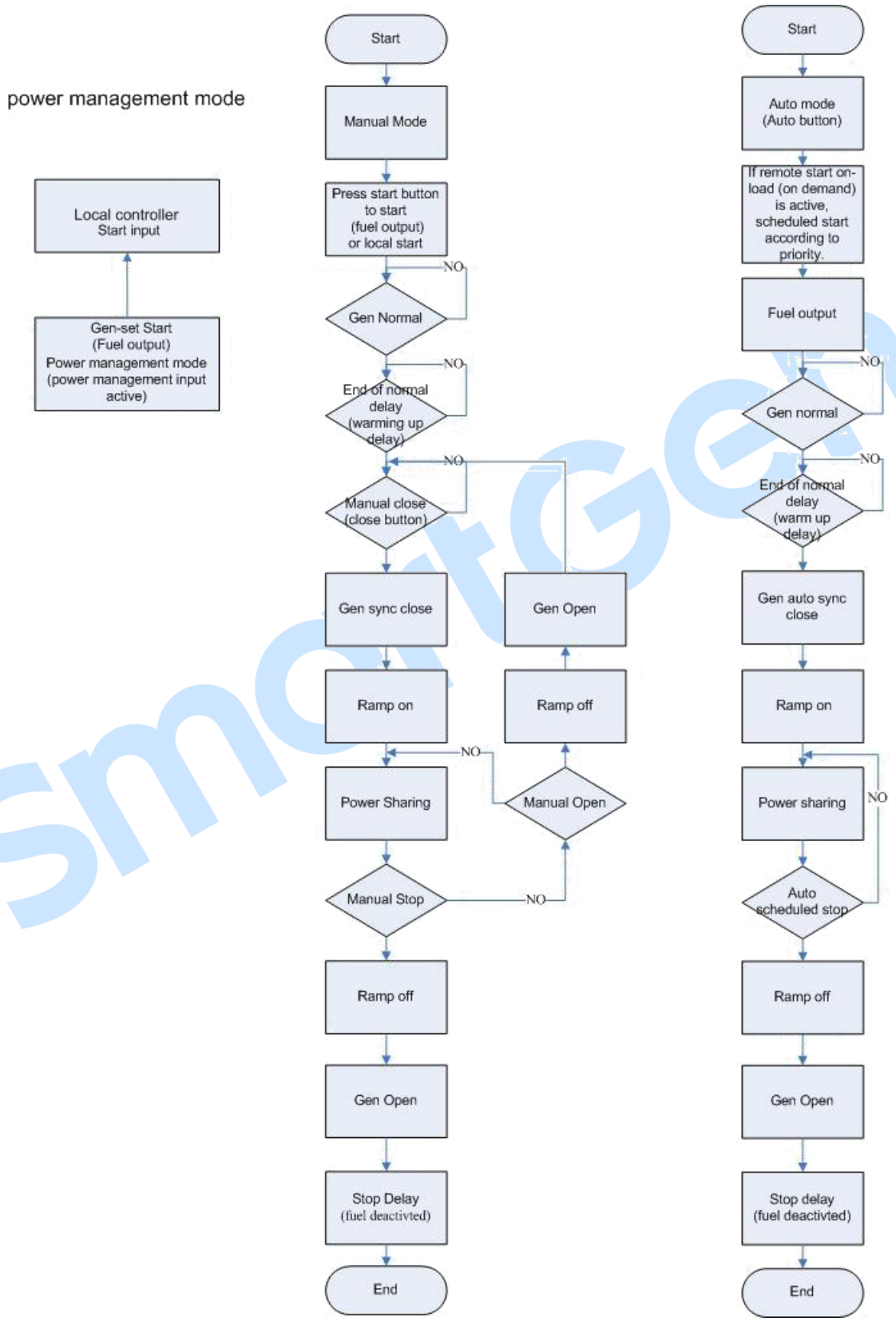

Fig.13 Power Management Logic

13 NEL TRIP DESCRIPTION

Non-essential load----NEL is the abbreviation.

The controller can control the NEL1, NEL2 and NEL3 to trip separately. The order of the essentiality is NEL3 > NEL2 > NEL1.

◆ Auto Trip

When NEL auto trip is enabled:

If the genset power has exceeded the NEL trip value, after the trip delay, NEL1 will trip first, and then is NEL2, NEL3;

When NEL auto reconnection is enabled:

If the genset power has fallen below the reconnection set value, after the reconnection delay, NEL3 will reconnect first, and then is NEL2, NEL1.

t1: NEL Trip Delay
t2: Reconnection Delay

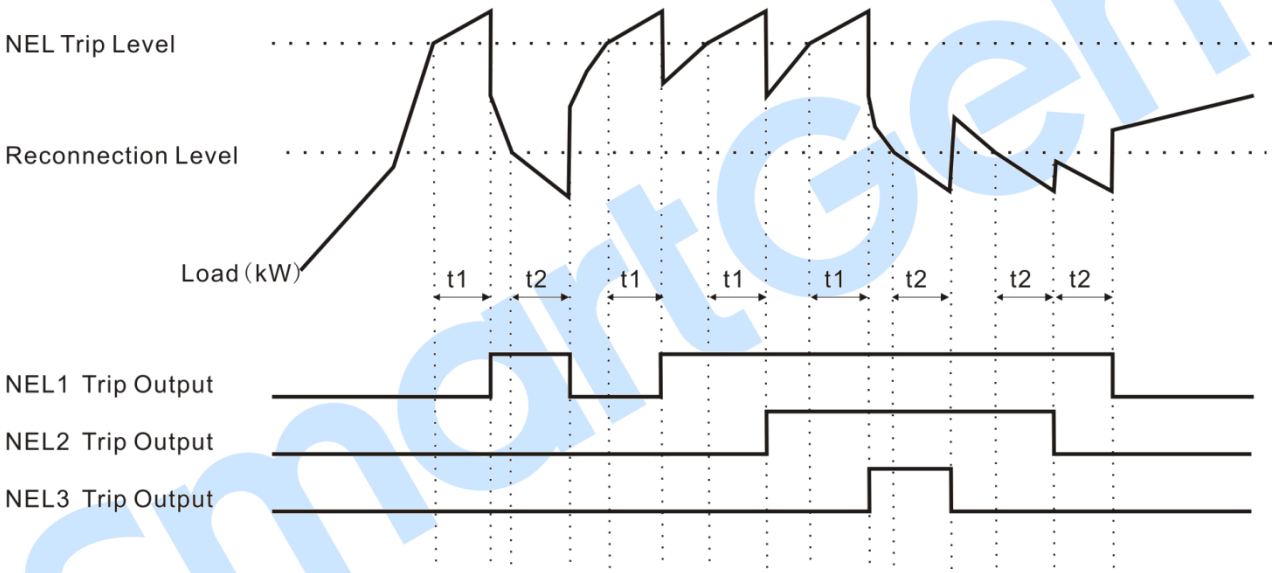

Fig.14 NEL Sequence

◆ Manual Trip

If NEL manual trip input is active (earthed falling edge is active), NEL1 will trip immediately; If NEL manual trip input is active again, NEL2 will trip; If NEL manual trip input is active for the third time, NEL3 will trip;

If NEL manual reconnection input is active (earthed falling edge is active), NEL3 will reconnect immediately; If NEL manual reconnection input is active again, NEL2 will reconnect; If NEL manual reconnection input is active for the third time, NEL1 will reconnect. During this process, the controller detects the genset power: if the genset power has fallen below the NEL reconnection value, then the input is active; otherwise, the input is deactivated.

⚠**NOTE:** When auto trip and auto reconnection are enabled, manual trip is still active.

14 DUMMY LOAD CONNECTION

Dummy load ---- DL for short.

The controller can control the 3 ways of DL connection separately. The order of the essentiality is DL1 > DL2 > DL3.

◆ Auto Operation

When DL auto connection is enabled:

If the genset power has fallen below the DL connection value, after the connection delay, DL1 will connect first, and then is DL2, DL3;

When DL auto disconnection is enabled:

If the genset power has exceeded the DL disconnection value, after the disconnection delay, DL3 will disconnect first, and then is DL2, DL1.

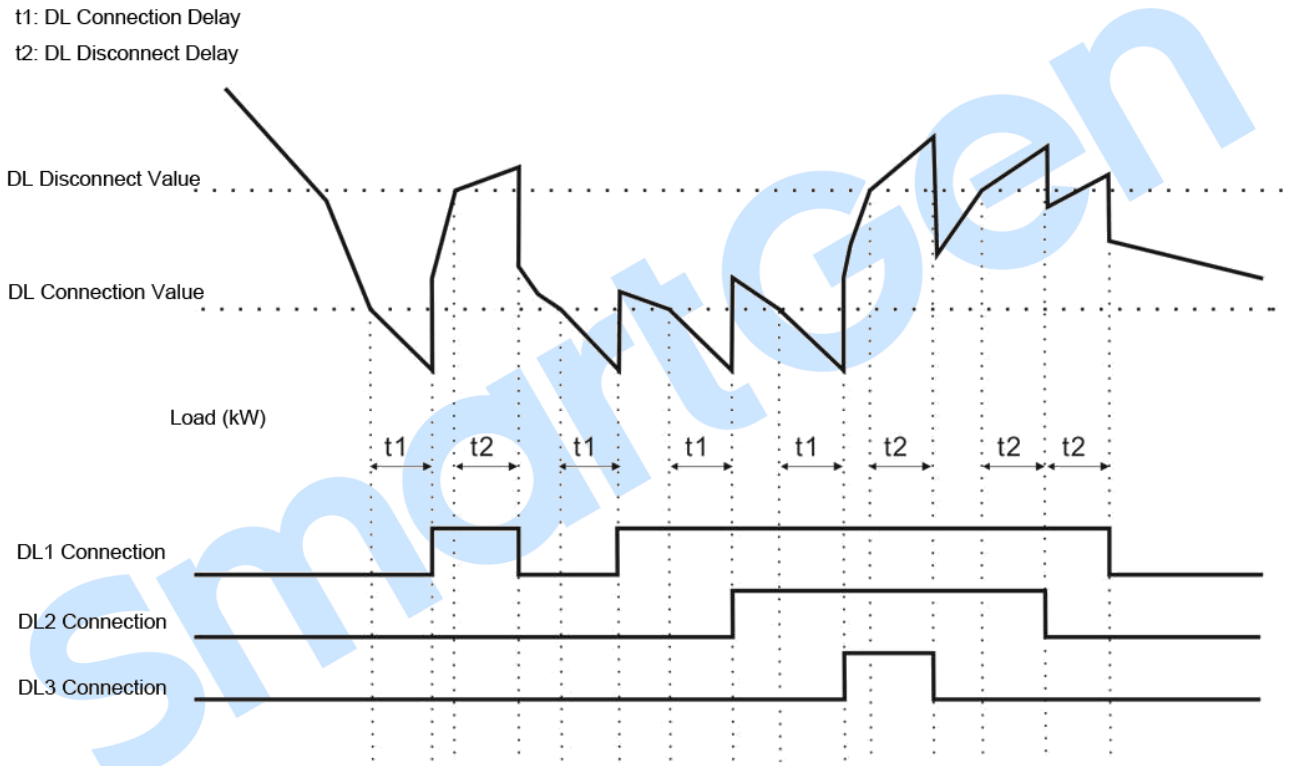

Fig.15 DL Sequence

◆ Manual Operation

If manual DL connection input is active (earthed falling edge is active), DL1 will connect without delay; If manual DL connection input is active again, DL2 will connect; If manual DL connect input is active for the third time, DL3 will connect. During this process, the controller will detect if the genset power has fallen the DL connection value or not. If genset power is below DL connection value, this input is active, otherwise, it will be ignored;

If manual DL disconnection input is active (earthed falling edge is active), DL3 will disconnect immediately; if manual DL disconnection input is active again, DL2 will disconnect; if manual DL disconnection input is active for the third time, DL1 will disconnect.

NOTE: When auto connection and auto disconnection are enabled, manual operation is still active.

15 GROUND BREAKER CONTROL DESCRIPTION

This function can be realized via configuring ground breaker of controller output port.

Priority of closing ground breaker: in the closed gensets, the genset with the biggest rated power has the top priority to close ground breaker. If genset rated power is same, it is chosen based on the module priority. When the ground breaker of the genset with top priority fails to close, the genset with next top priority will be chosen. When there is a grounding breaker open fault in the closed gensets, the other units are prohibited from closing the grounding breaker.

Ground breaker action:

a. Genset at rest: ground breaker is opened.

b. Genset is not at rest and generator is opened: ground breaker is closed.

c. Genset is normally running and generator is closed: ground breaker is closed when this genset with the top priority, otherwise, ground breaker is opened.

SmartGen

16 PRIORITY RUNNING AND BALANCED RUNNING TIME DESCRIPTION

Different module IDs must be configured for the controller, but the module priority can be same (the smaller number with the higher priority). Balanced Running Time function is enabled by the controller "Balance Hours" function. All gensets that need to have balanced running time shall set the same module priority.

Scheduling running principles:

a. Genset with the higher priority starts firstly and stop lastly.

b. Gensets with the same priority:

If "Balance Hours" function is enabled, the unit with less running time has higher priority, otherwise, the unit with the smaller module ID has higher priority. User accumulated running time B is chosen for running time.

c. When "Scheduling Sets Mode" is genset power percentage, if load (%) exceeds pre-set "Scheduling Start (%)", the standby genset with highest priority will start; if load (%) falls below pre-set "Scheduling Start (%)" after one genset stopping, the genset with lowest priority will stop.

d. When "Scheduling Sets Mode" is available power, if bus available power (difference value between rated power of closed gensets and current loading power) falls below "Scheduling Start (W)", the standby genset with highest priority will start; if bus available power exceeds pre-set "Scheduling Stop (W)" after one generator is shutdown, the genset with lowest priority will stop.

e. If "Sets on Bus" is the minimum scheduled sets number, the number of genset on the bus is prioritized.

f. "Fuel Economy" scheduling function cannot work together with "Balance Hours" scheduling function. If "Fuel Economy" scheduling is enabled, "Balance Hours" scheduling function will not work.

e.g.: Rated power of genset 1 is 100kW, module ID is 1 and priority is 1; rated power of genset 2 is 100kW, module ID is 2 and priority is 2; rated power of genset 3 is 100kW, module ID is 3 and priority is 2, and genset 2 has the same running time with genset 3. The three gensets settings are: "Balance Hours" is enabled, and "Balance Hours" is set as 1 hour, "Scheduling Sets Mode" is genset power percentage and set scheduling start percentage is 80% and scheduling stop percentage is 50%, "Sets on Bus" number is 1.

Three gensets are in auto mode, and "start on demand" is active, then genset 1 starts and takes load.

Current load is 85kW; genset 1 load percentage is 85%, which is above "Scheduling Start (80%)". Since genset 2 has the same running time with genset 3, but genset 2 ID is smaller than genset 3, so genset 2 will start and take load.

After running for 1 hour, current load is 90kW, genset 2 load percentage is 45%, running time of genset 2 is longer than genset 3, and then genset 3 will start and take load. If it meets "Scheduling Start (%)" condition, genset 2 will ramp-off load and stop.

Current load is 166kW, start genset load percentage is 83%, which is above "Scheduling Start (80%)", other gensets will request to start, and then genset 2 will start and take load.

17 FUEL ECONOMY DESCRIPTION

It is enabled by “Fuel Economy” setting of the controller. All sets shall be set as the same fuel economy parameters, including “Fuel Economy”, “Fuel Economy (%)”, and “Economy Swap (W)”.

Scheduling running principles:

a. First, use the fewest parallel sets if it is possible. If one set is enough to satisfy the running conditions, do not use two, and so on.

b. Secondly, satisfy fuel economy percentage. The load percentage of the chosen running plan shall not be bigger than and shall be closest to the fuel economy percentage.

c. It shall be satisfied that the total difference of the two plans’ rated powers shall be bigger than the exchange power when the better running plan is employed.

d. Start/stop scheduling parameters (scheduling start percentage, scheduling stop percentage, scheduling start available power, scheduling stop available power, online unit number) shall still work when the fuel economy is enabled.

e. “Fuel Economy” and “Balance Hours” scheduling cannot be used at the same time. When “Fuel Economy” is enabled, “Balance Hours” shall not be active.

E.g., the rated power of Genset 1 is 100kW, Genset 2 300kW, Genset 3 500kW. Settings: “Fuel Economy” enabled, “Economy Swap (W)” 200kW, “Fuel Economy (%)” 50%, “Scheduling Start (%)” 85%, “Scheduling Stop (%)” 50%.

Current load is 0kW and all of them are power-off. Then Genset 1 starts and loads.

Current load is 60kW, and Genset 1 loading percentage is 60%, which is bigger than “Fuel Economy (%)” 50%. Choose the best running plan Genset 2. Previous plan’s rated power is 100kW and the best plan’s is 300kW, so the exchange power is not less than 200kW. Genset 2 starts and loads, and Genset 1 unloads and stops.

Current load is 160kW, and Genset 2 loading percentage is 53.3%, which is bigger than “Fuel Economy (%)” 50%. Choose the best running plan Genset 3 and it satisfies the exchange power. Genset 3 starts and loads, and Genset 2 unloads and stops.

Current load is 260kW, and Genset 3 loading percentage is 52%, which is bigger than “Fuel Economy (%)” 50%. Then choose the best plan Genset 1 + Genset 3. Previous plan’s rated power is 500kW and this one is 600kW, so the exchange power is less than 200kW, genset 3 still takes loads separately.

Current load is 310kW, and Genset 3 loading percentage is 62%, which is bigger than “Fuel Economy (%)” 50%. Then choose the best plan Genset 2 + Genset 3. Previous plan’s rated power is 500kW and this one is 800kW, which conforms to the exchange power. Genset 2 starts and loads with Genset 3 together.

18 STATIC PARALLEL DESCRIPTION

Static parallel function can be chosen by a digital input port.

It applies to fast parallel occasions. All gensets disconnect generator excitation and close the switch to start at the same time. After all the generators' speed is up to the loading speed and meanwhile excitation signals are issued. At this time, the generator voltage is formed and the genset parallel is completed. This procedure spares the time used in the normal parallel process when the genset is waiting for all synchronous conditions are satisfied and then close the switch to start. If the genset cannot realize the excitation output condition during the "Static Parallel Delay" period, it exits from "Static Parallel" mode and changes to normal parallel mode. The genset opens the switch and excitation outputs. After all synchronous conditions are satisfied it closes and starts to work.

This function applies to soft-start loading occasion. For example, when the genset connects to the transformer.

SmartGen

19 HC REQUEST

Each controller can deal with two HC requests: HC 1 and HC 2, and HC1 > HC 2. The priority of the controller decides the priority of its HC request. That is HC request of high priority controllers is prior to response.

When a HC is asking the controller for starting request, the system shall remain the demanded capacity in the busbar until the system predicts that the capacity left in the busbar satisfies the demand after the HC starts.

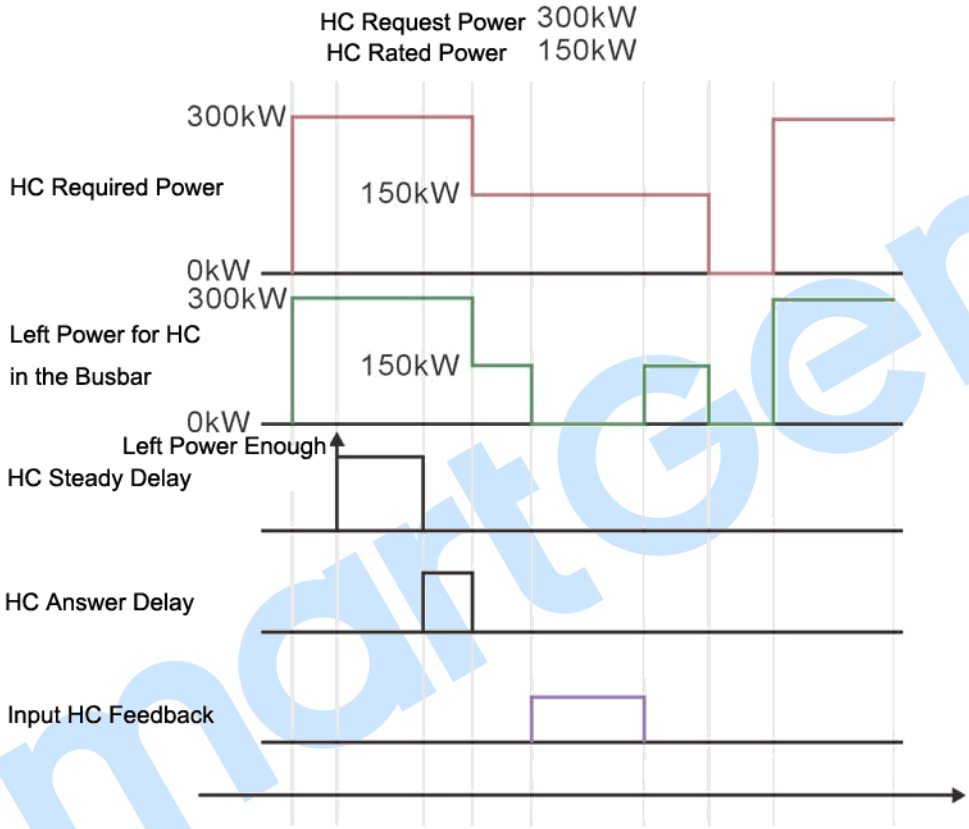

Fig.16 HC Sequence Graph

HC sequence graph description:

a. HC 1 request power 300kW; HC 1 rated power 150kW;

b. Left power 300kW for HC 1 in the busbar; if the current genset cannot meet, the spare genset starts.

c. There is enough left power in the busbar and “HC Steady Delay” starts.

d. After “HC Steady Delay”, the controller starts to output answer signal.

e. During/after the “Answer Delay”, according to the different status of the feedback and request signal, the busbar has different resolution for HC 1.

f. If the feedback is valid, the busbar shall not remain power for HC 1.

g. If the feedback is invalid, the busbar only reserves HC 1 rated power when HC request is valid.

h. If the feedback is invalid, the busbar will not reserve any power when HC request is invalid.

20 INSTALLATION

The controller is split-type design; HGM8510D is panel-mounted installation and is fixed by clips; HGM8510M is fixed by M5×4 screw in installation. Dimensions see the following diagrams.

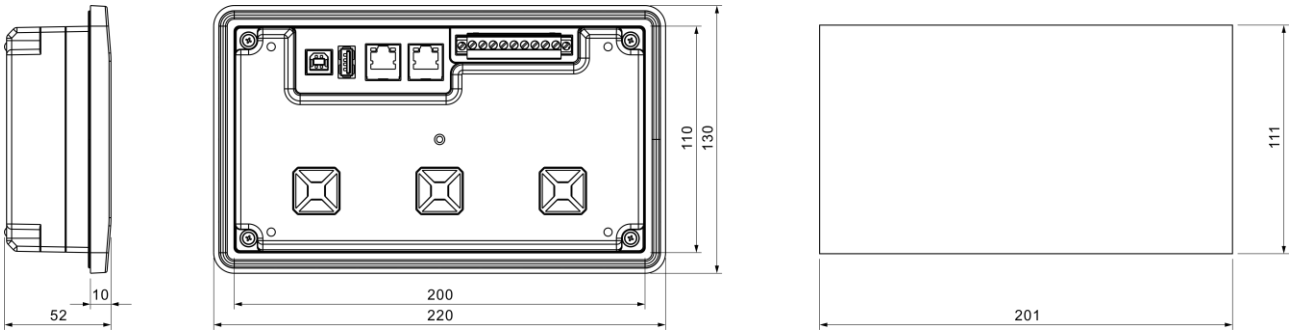

Fig.17 HGM8510D Installation and Cutout Dimensions (Unit: mm)

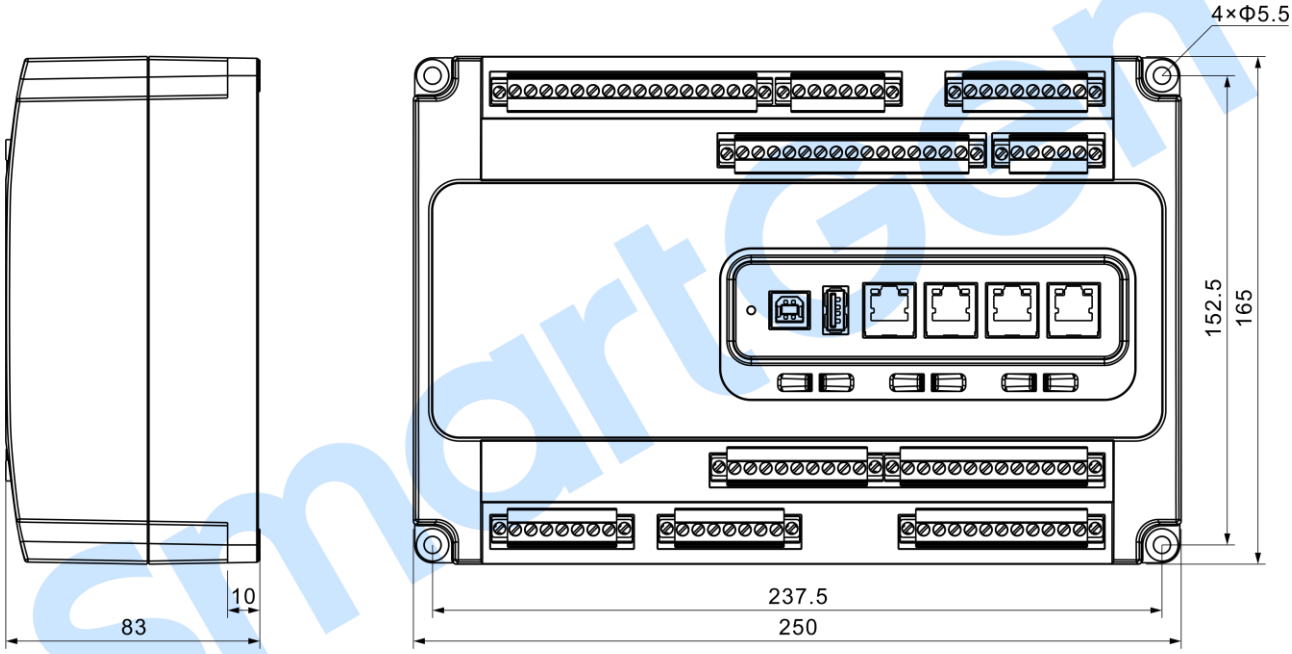

Fig.18 HGM8510M Installation Dimensions (Unit: mm)

1) Battery Voltage Input

NOTE: HGM8510 controller can suit for wide range of battery voltage (8~35) VDC. Battery negative electrode must be connected with the engine shell stably. The wire connecting controller power B+/B- with negative and positive electrodes cannot be less than 2.5mm^2. If floating charger is configured, please firstly connect output wires of charger to battery's positive and negative directly, and then connect wires from battery's positive and negative to controller's positive and negative input ports separately in order to prevent the charger from disturbing the controller's normal working.

2) Speed Sensor Input

NOTE: Speed sensor is the magnetic equipment installed on the engine body to detect flywheel teeth number. The wires used to connect with the controller shall be 2-core shielding wires. The shielding layer shall be connected to No.2 terminal on the controller, and meanwhile the other terminal shall be hanging in the air. Another two signal wires shall be connected to No.45 and No.46 terminals on the controller. The output voltage of the speed sensor shall be within (1~24) VAC (effective value) in the range of full speed and 12VAC (at rated speed) is recommended. As to speed sensor

installation, the sensor can firstly be spun to the connection flywheel, then invert 1/3 lap, and finally tighten up the screw on the sensor.

3) Output and Expand Relays

⚠**CAUTION!** All controller outputs are relay contact outputs. If the expansion relay is needed, freewheel diode (relay coil is DC) and resistor and capacitor circuit (relay coil is AC) shall be added to the two ends of the relay coils in order to prevent disturbing the controller or others equipment.

4) AC Current Input

Controller current input must be connected to outside current transformer. The secondary side current of the current transformer must be 5A and at the same time current transformer phase and input voltage phase must be correct, otherwise the collected current and active power maybe not correct.

WARNING! When there is load current, open circuit of transformer's secondary side is prohibited.

5) Withstand Voltage Test

⚠**CAUTION!** When controller has been installed on the control panel, if need the withstand voltage test, please disconnect controller's all terminal connections, in order to prevent high voltage entering and damaging it.

SmartGen

21 CONNECTIONS OF CONTROLLER AND J1939 ENGINE

21.1 CUMMINS ISB/ISBE

Table 26 Connector B

Terminals of controller	Connector B	Remark
Fuel relay output	39	
Starting relay output	-	Connected with starter coil directly.
Digital output 1	Expansion 30A relay; providing battery voltage for terminal 01, 07, 12, 13.	ECU power; Set output 1 as “ECU power”.

Table 27 9-Pin Connector

Terminals of controller	9 pins connector	Remark
CAN GND	SAE J1939 shield	CAN communication shielding line (connected with ECU terminal only).
CAN(H)	SAE J1939 signal	Using impedance 120Ω connecting line.
CAN(L)	SAE J1939 return	Using impedance 120Ω connecting line.

Engine type: Cummins ISB.

21.2 CUMMINS QSL9

Suitable for CM850 engine control module.

Table 28 50-Pin Connector

Terminals of controller	50 pins connector	Remark
Fuel relay output	39	
Starting relay output	-	Connected to starter coil directly.

Table 29 9-Pin Connector

Terminals of controller	9 pins connector	Remark
CAN GND	SAE J1939 shield-E	CAN communication shielding line (connected with ECU terminal only).
CAN(H)	SAE J1939 signal-C	Using impedance 120Ω connecting line.
CAN(L)	SAE J1939 return-D	Using impedance 120Ω connecting line.

Engine type: Cummins-CM850.

21.3 CUMMINS QSM11 (IMPORT)

It is suitable for CM570 engine control module. Engine type is QSM11 G1, QSM11 G2.

Table 30 C1 Connector

Terminals of controller	C1 connector	Remark
Fuel relay output	5&8	External expansion relay; make port 5 and port 8 of C1 connector be connected in fuel output.
Starting relay output	-	Connected to starter coil directly.

Table 31 3-Pin Data Link Connector

Terminals of controller	3 pins data link connector	Remark
CAN GND	C	CAN communication shielding line (connected with ECU terminal only).
CAN(H)	A	Using impedance 120Ω connecting line.
CAN(L)	B	Using impedance 120Ω connecting line.

Engine type: Cummins ISB.

21.4 CUMMINS QSX15-CM570

It is suitable for CM570 engine control module. Engine type is QSX15 etc.

Table 32 50-Pin Connector

Terminals of controller	50 pins connector	Remark
Fuel relay output	38	Injection switch.
Starting relay output	-	Connected to starter coil directly.

Table 33 9-Pin Connector

Terminals of controller	9 pins connector	Remark
CAN GND	SAE J1939 shield-E	CAN communication shielding line (connected with ECU terminal only).
CAN(H)	SAE J1939 signal-C	Using impedance 120Ω connecting line.
CAN(L)	SAE J1939 return-D	Using impedance 120Ω connecting line.

Engine type: Cummins QSX15-CM570.

21.5 CUMMINS GCS-MODBUS

It is suitable for GCS engine control module. Use RS485-MODBUS to read information of engine. Engine types are QSX15, QST30, QSK23/45/60/78 and so on.

Table 34 D-SUB Connector 06

Terminals of controller	D-SUB connector 06	Remark
Fuel relay output	5&8	Outside expansion relay; make port 05 and 08 of connector 06 be connected in fuel output.
Starting relay output	-	Connected to starter coil directly.
RS485 GND	20	CAN communication shielding line (connected with ECU this terminal only).
RS485+	21	Using impedance 120Ω connecting line.
RS485-	18	Using impedance 120Ω connecting line.

Engine type: Cummins QSK-MODBUS, Cummins QST-MODBUS, Cummins QSX-MODBUS.

21.6 CUMMINS QSM11

Table 35 Engine OEM Connector

Terminals of controller	OEM connector of engine	Remark
Fuel relay output	38	
Starting relay output	-	Connected with starter coil directly.
CAN GND	-	CAN communication shielding line (connected with controller's this terminal only).
CAN(H)	46	Using impedance 120Ω connecting line.
CAN(L)	37	Using impedance 120Ω connecting line.

Engine type: Common J1939.

21.7 CUMMINS QSZ13

Table 36 Engine OEM Connector

Terminals of controller	OEM connector of engine	Remark
Fuel relay output	45	
Starting relay output	-	Connected to starter coil directly.
Digital output 1	16&41	Set as idling speed control; (N/C) output; by expansion relay, make 16&41 close as the controller is running.
Digital output 2	19&41	Set as pulse speed raising control; (N/O) output; by expansion relay, make 19&41 close for 0.1s as the controller is entering warming-up time.
CAN GND	-	CAN communication shielding line (connected with controller's this terminal only).
CAN(H)	1	Using impedance 120Ω connecting line.
CAN(L)	21	Using impedance 120Ω connecting line.

Engine type: Common J1939.

21.8 DETROIT DIESEL DDEC III/IV

Table 37 Engine CAN Port

Terminals of controller	CAN port of engine	Remark
Fuel relay output	Expansion 30A relay, proving battery voltage for ECU.	
Starting relay output	-	Connected to starter coil directly.
CAN GND	-	CAN communication shielding line (connected with controller terminal only).
CAN(H)	CAN(H)	Using impedance 120Ω connecting line.
CAN(L)	CAN(L)	Using impedance 120Ω connecting line.

Engine type: Common J1939.

21.9 DEUTZ EMR2

Table 38 F Connector

Terminals of controller	F connector	Remark
Fuel relay output	Expansion 30A relay, proving battery voltage for 14; Fuse is 16A.	
Starting relay output	-	Connected to starter coil directly.
-	1	Connected to battery negative.
CAN GND	-	CAN communication shielding line (connected with controller terminal only).
CAN(H)	12	Using impedance 120Ω connecting line.
CAN(L)	13	Using impedance 120Ω connecting line.

Engine type: Volvo EDC4.

21.10 JOHN DEERE

Table 39 21-Pin Connector

Terminals of controller	21 pins connector	Remark
Fuel relay output	G, J	
Starting relay output	D	
CAN GND	-	CAN communication shielding line (connected with controller terminal only).
CAN(H)	V	Using impedance 120Ω connecting line.
CAN(L)	U	Using impedance 120Ω connecting line.

Engine type: John Deere.

21.11 MTU ADEC (SMART MODULE)

Suitable for MTU engines with ADEC (ECU8) and SMART module.

Table 40 ADEC

Terminals of controller	ADEC (X1 port)	Remark
Fuel relay output	X1 10	X1 9 shall connect battery negative.
Starting relay output	X1 34	X1 33 shall connect battery negative.

Table 41 SMART

Terminals of controller	SMART (X4 port)	Remark
CAN GND	X4 3	CAN communication shielding line (connected with controller's this terminal only).
CAN(H)	X4 1	Using impedance 120Ω connecting line.
CAN(L)	X4 2	Using impedance 120Ω connecting line.

Engine type: MTU-ADEC.

21.12 MTU ADEC (SAM MODULE)

It is suitable for MTU engine with ADEC (ECU7) and SAM module.

Table 42 ADEC

Terminals of controller	ADEC (X1 port)	Remark
Fuel relay output	X1 43	X1 28 shall connect negative of battery.
Starting relay output	X1 37	X1 22 shall connect negative of battery.

Table 43 SAM

Terminals of controller	SAM (X23 port)	Remark
CAN GND	X23 3	CAN communication shielding line (connected with controller's this terminal only).
CAN(H)	X23 2	Using impedance 120Ω connecting line.
CAN(L)	X23 1	Using impedance 120Ω connecting line.

Engine type: Common J1939.

21.13 PERKINS

It is suitable for ADEM3/ADEM4 engine control module. Engine type is 2306, 2506, 1106, and 2806.

Table 44 Connector

Terminals of controller	Connector	Remark
Fuel relay output	1, 10, 15, 33, 34	
Starting relay output	-	Connected to starter coil directly.
CAN GND	-	CAN communication shielding line (connected with controller terminal only).
CAN(H)	31	Using impedance 120Ω connecting line.
CAN(L)	32	Using impedance 120Ω connecting line.

Engine type: Perkins.

21.14 SCANIA

It is suitable for S6 engine control module. Engine type is DC9, DC12, and DC16.

Table 45 B1 Connector

Terminals of controller	B1 connector	Remark
Fuel relay output	3	
Starting relay output	-	Connected to starter coil directly.
CAN GND	-	CAN communication shielding line (connected with controller's terminal only).
CAN(H)	9	Using impedance 120Ω connecting line.
CAN(L)	10	Using impedance 120Ω connecting line.

Engine type: Scania-s6.

21.15 VOLVO EDC3

Suitable engine control mode is TAD1240, TAD1241, and TAD1242.

Table 46 "Stand Alone" Connector

Terminals of controller	"Stand alone" connector	Remark
Fuel relay output	H	
Starting relay output	E	
Digital output 1	P	ECU power; Set output 1 as "ECU power".

Table 47 "Data Bus" Connector

Terminals of controller	"Data bus" connector	Remark
CAN GND	-	CAN communication shielding line (connected with controller terminal only).
CAN(H)	1	Using impedance 120Ω connecting line.
CAN(L)	2	Using impedance 120Ω connecting line.

Engine type: Volvo.

NOTE: When this engine type is selected, preheating time should be set to at least 3 seconds.

21.16 VOLVO EDC4

Suitable engine types are TD520, TAD520 (optional), TD720, TAD720 (optional), TAD721, TAD722, and TAD732.

Table 48 Connector

Terminals of controller	Connector	Remark
Fuel relay output	Expansion 30A relay, providing battery voltage for terminal 14. Fuse is 16A.	
Starting relay output	-	Connected to starter coil directly.
	1	Connected to negative of battery.
CAN GND	-	CAN communication shielding line (connected with controller terminal only).
CAN(H)	12	Using impedance 120Ω connecting line.
CAN(L)	13	Using impedance 120Ω connecting line.

Engine type: Volvo EDC4.

21.17 VOLVO-EMS2

Volvo Engine types are TAD734, TAD940, TAD941, TAD1640, TAD1641, and TAD1642.

Table 49 Engine CAN Port

Terminals of controller	Engine's CAN port	Remark
Digital output 1	6	ECU stop; Set output 1 "ECU stop".
Digital output 2	5	ECU power; Set output 2 "ECU power".
	3	Power negative.
	4	Power positive.
CAN GND	-	CAN communication shielding line (connected with controller's this terminal only).
CAN(H)	1(Hi)	Using impedance 120Ω connecting line.
CAN(L)	2(Lo)	Using impedance 120Ω connecting line.

Engine type: Volvo-EMS2.

NOTE: When this engine type is selected, preheating time should be set to at least 3 seconds.

21.18 YUCHAI

It is suitable for Yuchai BOSCH common rail electronic-controlled engine.

Table 50 Engine 42-Pin Port

Terminals of controller	Engine 42 pins port	Remark
Fuel relay output	1.40	Connected to engine ignition lock.
Starting relay output	-	Connected to starter coil directly.
CAN GND	-	CAN communication shielding line (connected with controller's this terminal only).
CAN(H)	1.35	Using impedance 120Ω connecting line.
CAN(L)	1.34	Using impedance 120Ω connecting line.

Table 51 Engine 2-Pin Port

Battery	Engine 2 pins port	Remark
Battery negative	1	Wire diameter 2.5mm^2.
Battery positive	2	Wire diameter 2.5mm^2.

Engine type: Yuchai.

21.19 WEICHAI

It is suitable for Weichai BOSCH common rail electronic-controlled engine.

Table 52 Engine Port

Terminals of controller	Engine port	Remark
Fuel relay output	1.40	Connected to engine ignition lock.
Starting relay output	1.61	
CAN GND	-	CAN communication shielding line (connected with controller's this terminal only).
CAN(H)	1.35	Using impedance 120Ω connecting line.
CAN(L)	1.34	Using impedance 120Ω connecting line.

Engine type: Weichai.

NOTE: If there is any question of connection between controller and ECU communication, please feel free to contact SmartGen's service.

22 FAULT FINDING

Table 53 Fault Finding

Symptoms	Possible Solutions
Controller no response with power	Check starting batteries; Check controller connection wirings; Check DC fuse.
Genset shutdown	Check the water/cylinder temperature is too high or not; Check the AC generator voltage; Check DC fuse.
Controller emergency stop	Check emergence stop button is correct or not; Check whether the starting battery positive is connected with the emergency stop input; Check whether there is open circuit.
Low oil pressure alarm after crank disconnect	Check the oil pressure sensor and its connections.
High water temperature alarm after crank disconnect	Check the water temperature sensor and its connections.
Shutdown alarm in running	Check related switch and its connections according to the information on LCD; Check digital inputs.
Crank disconnect failure	Check fuel circuit and its connections; Check starting batteries; Check speed sensor and its connections; Refer to engine manual.
Starter no response	Check starter connections; Check starting batteries.
Genset running while ATS no action	Check ATS; Check the connections between ATS and controllers.
RS485 comm. abnormal	Check connections; Check settings of COM port are correct or not; Check RS485's A and B connections are reversely connected or not; Check RS485 conversion module is damaged or not; Check communication port of PC is damaged or not.
ECU comm. failure	Check the polarity of CAN high and CAN low; Check 120Ω terminal resistor is correctly connected or not; Check engine type is correctly chosen or not; Check controller and engine connections are correct or not; Check output port setting is correct or not.
ECU alarm	Get information from LCD alarm page; If there is detailed alarm information, check the engine according to the description. If not, please refer to engine manual according to SPN alarm code.

SmartGen

Symptoms	Possible Solutions
Few bus module	Check network bus module number is correct or not; Check network communication is normal or not.
Network monitoring comm.	Check connections; Check network IP, MAC addresses are correct or not.

SmartGen