SmartGen

MAKING CONTROL SMARTER

ACC1700

DIESEL AIR COMPRESSOR CONTROLLER

USER MANUAL

郑州众智科技股份有限公司
SMARTGEN(ZHENGZHOU)TECHNOLOGY CO.,LTD.

SmartGen Registered trademark

No. 28 Xuemei Street, Zhengzhou, Henan, China

Tel: +86-371-67988888/67981888/67992951

+86-371-67981000 (overseas)

Fax: +86-371-67992952

Web: www.smartgen.com.cn/

www.smartgen.cn/

Email: sales@smartgen.cn

All rights reserved. No part of this publication may be reproduced in any material form (including photocopying or storing in any medium by electronic means or other) without the written permission of the copyright holder.

SmartGen reserves the right to change the contents of this document without prior notice.

Table 1 Software Version

Date	Version	Note
2024-10-18	1.0	Original release.

SmartGen

Table 2 Notation Clarification

Sign	Instruction
NOTE	Highlights an essential element of a procedure to ensure correctness.
CAUTION!	Indicates a procedure or practice, which, if not strictly observed, could result in damage or destruction of equipment.
WARNING!	Indicates a procedure or practice, which could result in injury to personnel or loss of life if not followed correctly.

SmartGen

CONTENTS

1 OVERVIEW 6
2 PERFORMANCE AND FEATURES 6
3 SPECIFICATIONS 7
4 MODEL COMPARISON 7
5 OPERATION 8
5.1 CONTROLLER PANEL 8
5.2 KEYS FUNCTION DESCRIPTION 9
5.3 START/STOP OPERATION 9
5.3.1 START SEQUENCE 9
5.3.2 STOP SEQUENCE 10
5.4 START OPERATION FOR PRE-LUBRICATION OUTPUT SETTING 10
5.5 EMERGENCY START 10
5.6 LOAD/UNLOAD SPEED REGULATION PROCESS OF AIR COMPRESSOR 10
6 DPF MANUAL REGENERATION 12
6.1 INSTRUCTION 12
6.2 PANEL ICON DESCRIPTION OF DPF REGENERATION 12
6.3 DPF MANUAL REGENERATION OPERATION 12
7 PROTECTION 14
7.1 WARNINGS 14
7.2 SHUTDOWNS 15
8 WIRE CONNECTION 17
9 CONFIGURATION PARAMETER RANGE AND DEFINITION 19
9.1 PARAMETER RANGE AND DEFINITION 19
9.2 DEFINABLE CONTENTS OF AUXILIARY OUTPUT PORTS 1~4 34
9.2.1 DEFINABLE CONTENTS OF AUXILIARY OUTPUT PORTS 1~4 34
9.2.2 CUSTOM PERIOD OUTPUT 38
9.2.3 CUSTOM COMBINATION OUTPUT 38
9.3 DEFINABLE CONTENTS OF DIGITAL INPUT PORTS 39
9.4 SELECTION OF SENSORS 41
9.5 CONDITIONS OF CRANK DISCONNECT SELECTION 42
9.6 MAINTENANCE SETTING 43
10 PARAMETERS SETTING 44
11 SENSOR SETTING 45
12 COMMUNICATION CONFIGURATION AND CONNECTION 46
12.1 DESCRIPTION 46
12.2 RS485 COMMUNICATION DESCRIPTION 46
12.3 TERMINATION RESISTOR 46
13 COMMISSIONING 46
14 TYPICAL APPLICATION 47
15 INSTALLATION 48
16 CONNECTIONS OF CONTROLLER WITH J1939 ENGINE 50
16.1 CUMMINS QSL9 50

16.2 CUMMINS QSX15-CM570 50
16.3 CUMMINS QSZ13 51
16.4 DEUTZ EMR2 51
16.5 MTU ADEC (SMART MODULE) 52
16.6 MTU ADEC (SAM MODULE) 52
16.7 PERKINS 52
16.8 VOLVO-EMS2 53
16.9 YUCHAI 53
16.10 WEICHAI 53
17 TROUBLESHOOTING 54

SmartGen

1 OVERVIEW

ACC1700/ACC1700CAN Diesel Air Compressor Controller is used for air compressor with diesel-driven engine to realize air compressor start/stop, data measurement, maintenance, alarm protection and “Three Remotes”. ACC1700CAN controller has speed regulator function, and CANBUS (SAE J1939) port, which can control various ECU diesel air compressors.

ACC1700/ACC1700CAN Diesel Air Compressor Controller adopts 32-bit micro-processor technology, which can realize functions of precise measurement for many parameters, set-point adjustment, timing and threshold setting, etc. The parameters can be adjusted from the control panel, which can be adjusted and monitored on PC by the RS485 port as well. The controller can be widely applied to diesel-driven air compressor control system with small size, compact structure, simple wiring, and high reliability.

2 PERFORMANCE AND FEATURES

Main features are as follows:

- LCD screen with 132x64 resolution and backlight; Optional Chinese, English languages; Simple operation interface;
- Screen protection is hard screen of acrylic material with better wear-resisting and scratch resistant qualities;
- Silicon panel and buttons with strong adaptive capacity of high/low temperature environment;
- With RS485 communication port, it can realize “Three Remotes” function via MODBUS protocol;
- With CANBUS port, it can monitor common data of ECU engine (including speed, water temperature, oil pressure, engine load rate, fuel consumption);
- With Bluetooth communication function, it can carry out wireless control and data monitoring within 10~30 meters near the air compressor by mobile phone APP;
- DPF regeneration function, which meets the control requirements of engine exhaust aftertreatment;
- 5 ways of analog sensors, including 3 resistance type sensors, 1 current type sensor and 1 multifunctional sensor (resistance/current/voltage type), which can precisely detect data of engine temperature, oil pressure, fuel level, air compressor discharge pressure, discharge temperature;
- Provide multiple common temperature, pressure, and level sensor curves, and self-defined sensor curve is also available;
- All kinds of parameters of air compressor can be precisely collected and it has protection functions, such as high engine water temperature, low engine oil pressure, engine over speed, high air compressor discharge pressure, high air compressor discharge temperature, etc.;
- Speed regulation function enables it to automatically adjust speed according to discharge pressure of the air compressor;
- Crank disconnect conditions (speed, oil pressure) are optional;
- Wide power supply range DC (8-35V), which can suit different starting battery voltage environment;
- Event log function, which can continuously save 99 records;
- Heater, cooler and fuel pump control functions;
- Maintenance function, maintenance time due action can be set;
- Plastic sealing gasket is designed for enclosure and front panel can reach IP65 protection level;
- Modular design, anti-flaming enclosure, embedded mounting on the outside of control box, compact structure and easy installation.

3 SPECIFICATIONS

Table 3 Technical Parameters

Items	Contents
Operating Voltage	DC8.0V~35.0V, continuous power supply
Power Consumption	<3W (Standby mode: ≤2W)
Speed Sensor Voltage	1.0V~24.0V (RMS)
Speed Sensor Frequency	Max. 10,000Hz
Crank Relay Output	1A DC28V Active
Aux. Output 1~4	1A DC28V Active
Analog Sensor	Three resistance-type sensors (Aux. sensor 1, Aux. sensor 2, Aux. sensor 3) One multifunctional sensor (Aux. sensor 4) One current-type sensor (Aux. sensor 5)
Case Dimensions	96mm × 86mm × 47mm
Panel Cutout	78mm × 66mm
Working Temperature	(-25~+70)°C
Working Humidity	(20~93)%RH
Storage Temperature	(-30~+80)°C
Protection Level	Front panel: IP65
Weight	0.17kg

4 MODEL COMPARISON

Table 4 Model Comparison

Items	ACC1700	ACC1700CAN
Magnetic Pickup for Speed Detection	●	
Digital Inputs	1(E-STOP)+2	1(E-STOP)+2
Analog Sensors	5	5
Digital Outputs	5	5
RS485	●	●
CANBUS		●
Bluetooth	●	●

5 OPERATION

5.1 CONTROLLER PANEL

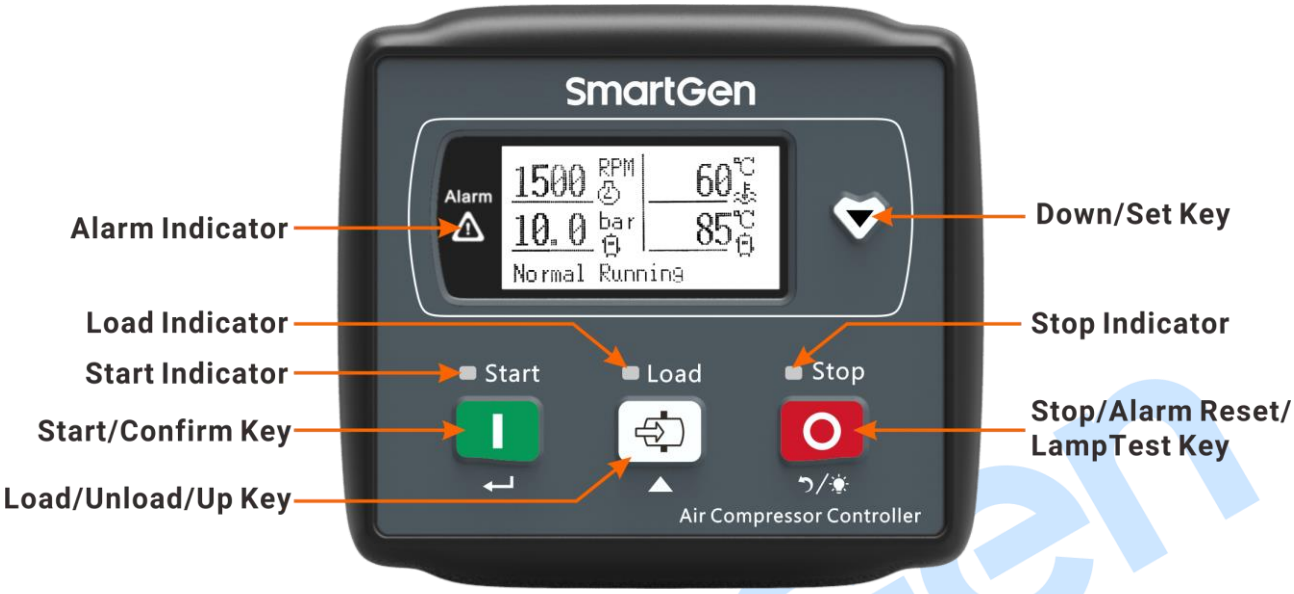

Fig.1 Front Panel

NOTE: Instructions of the indicators:

Alarm Indicator: slow flash (once per second) for warning alarms; quick flash (5 times per second) for shutdown alarms; light off for no alarms;

Start Indicator: it is always on when the air compressor is running normally.

Load Indicator: it is always on after the air compressor has loaded.

Stop Indicator: it is always on when the air compressor is in the stop status.

5.2 KEYS FUNCTION DESCRIPTION

Table 5 Keys Description

Icon	Keys	Function Description
	Start/Confirm	Home page: Press it to start the air compressor when it is in the power-off status. Parameter setting interface: Press it to confirm the settings.
	Load/Unload/Up	Home page: 1. In the idle running status, press it and engine speed will be raised. The load relay will output when the speed reaches loading speed; 2. In the normal running status, press it again, the load relay stops the output and the unit unloads. Parameter setting interface: Press it to move up the cursor or increase the value in setting page.
	Stop/ Alarm Reset/ Lamp Test	Home page: 1. In the start status, press it to stop the running air compressor; 2. In the stop status, press it to reset alarms; 3. In the stop status, press and hold it for more than 3 seconds to test if the indicators on the front panel work normally (lamp test); Parameter setting interface: Press it to return the previous menu.
	Down/Set	Home page: 1. Press it to scroll down the screen page. 2. Press and hold it for 3 seconds to enter the setting menu; Parameter setting interface: Press it to move down the cursor or reduce the value in setting page.

5.3 START/STOP OPERATION

5.3.1 START SEQUENCE

a) Press and start air compressor, then it enters the start control process;

b) If pre-heat time is configured, then pre-heat relay outputs (if configured); LCD displays “pre-heat delay xx”;

c) After pre-heat delay is over, fuel relay outputs the pre-set fuel time before start (default: 1s), then starting relay outputs; If air compressor crank disconnect fails during “crank time”, then fuel relay and starting relay stop outputting, and enter “crank rest time”, waiting for next start;

d) After the pre-set start attempts, if air compressor doesn't succeed to start, then controller issues failed to start alarm, and meanwhile LCD alarm page displays “Failed to Start” alarm;

e) During any one of the start attempts, if crank disconnect is fulfilled, then it enters "Safety On Delay", during which oil pressure low, water temperature high, under speed, and charging failure alarms are all inactive; after safety on delay it enters “Start Idle Delay” (if configured);

f) After “Start Idle Time” it enters idle running; if load key is pressed, then it enters “Warming Up Time” (if configured);

g) When warming up time is ended, it enters normal running status.

5.3.2 STOP SEQUENCE

a) Press , and stop the running air compressor; before stop if load control outputs, then disconnect load control;
b) If “Cooling Time” is configured, then “cooling delay” starts; when cooling delay is over, it enters “Stop Idle Delay”;
c) When it enters stop idle delay (if configured), then idle relay is energized to output;
d) It enters “ETS Solenoid Hold”, and ETS relay is energized to output; fuel relay output is disconnected;
e) It enters “Wait Stop Time”, and automatically judges whether it stops completely;
f) When air compressor stops completely, it enters “After Stop Time”; Otherwise, controller enters stop failure and issues “Stop Failure” warning (after the alarm, if air compressor stops completely, then it enters “After Stop Time”, and meanwhile “Stop Failure” alarm is removed automatically);
g) When “After Stop Time” is over, it enters standby status.

5.4 START OPERATION FOR PRE-LUBRICATION OUTPUT SETTING

When the output port is configured to “Pre-lubrication Output”:

If the set pre-lubrication time is less than or equal to the pre-heat time, the pre-lubrication relay outputs when it enters the pre-heat time, and the pre-lubrication output stops after the set pre-lubrication time.

If the set pre-lubrication time is more than the pre-heat time, the pre-lubrication relay outputs when it enters the pre-heat time; after pre-heat delay is over, it enters the following pre-lubrication phase, and LCD displays “Pre-lubrication Time XX”; after pre-lubrication delay is over, the output stops and the total output time equals the set pre-lubrication time.

If air compressor stays at standby status and it outputs cyclically at the pre-set “Pre-lubrication Rest Time” and “Pre-lubrication Time”; If the pre-set “Pre-lubrication Rest Time” is 0h, then pre-lubrication doesn’t output at the standby status.

5.5 EMERGENCY START

NOTE: Press and simultaneously and air compressor can be started forcibly. At this time controller doesn't detect the unit crank disconnect by crank conditions. Starter's disconnect is controlled by the operator. When operator observes the unit has started, he/she should release the button. The starter stops outputting and controller enters Safety On Delay.

5.6 LOAD/UNLOAD SPEED REGULATION PROCESS OF AIR COMPRESSOR

Under the status of idle running, press and load control relay outputs. Controller enters normal running. If current discharge pressure is less than unloading action pressure, then engine speed goes up to rated speed. If current discharge pressure is larger than rated pressure, engine speed will decrease to unloading speed. Between rated pressure and unloading action pressure, speed decreases as pressure increases. Under normal running status, press and load control relay disconnects and it enters idle running. Engine speed returns to rated value.

For example:

Engine rated speed: 2200RPM
Engine unload speed: 70% (1540RPM)
Engine idle speed: 60% (1320RPM)
Air compressor load speed: 70% (1540RPM)
Air compressor rated pressure: 7.0 bar
Air compressor unload action pressure: 6.0 bar

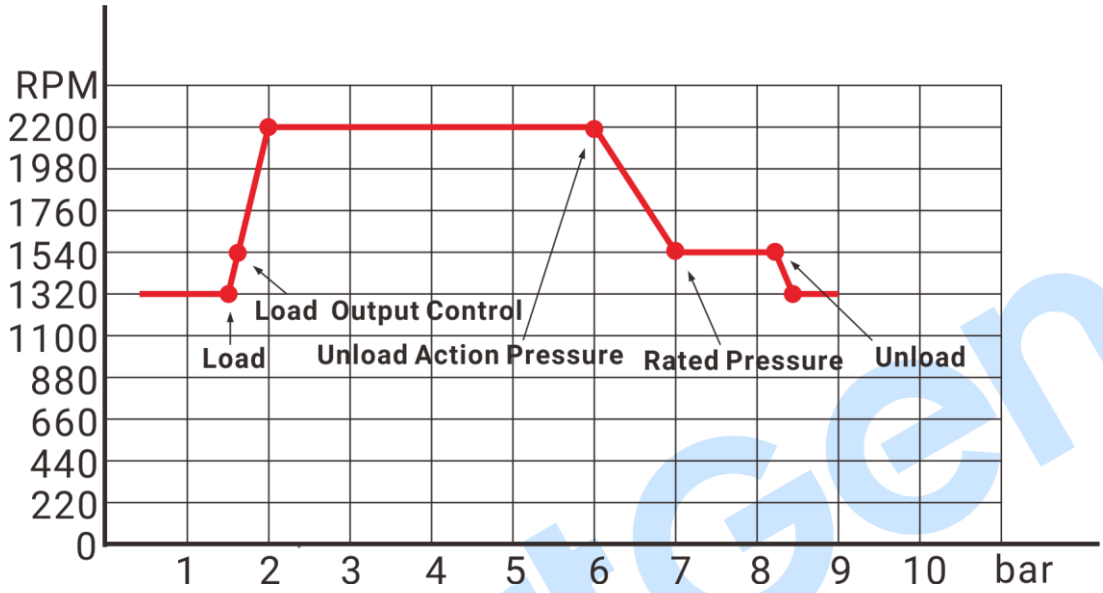

Fig.2 Speed - Pressure Curve Diagram

SmartGen

6 DPF MANUAL REGENERATION

6.1 INSTRUCTION

For engines that meets China Non-road Mobile Machinery Stage IV Emission Standard (hereinafter referred to as Stage IV), if the aftertreatment technical route contains DPF, it is required to have the DPF regeneration function.

Usually, engine can clear the particulates in DPF by automatic regeneration function. However, engine usually is at short-time status, no-load running or low-speed low-load running status, automatic regeneration cannot completely clear out the DPF particulates, and there may appear particulate block, and beyond the limitation. Under this circumstance, manual DPF regeneration operation is needed.

The controller supports manual regeneration function, which can realize manual DPF regeneration operation.

6.2 PANEL ICON DESCRIPTION OF DPF REGENERATION

Table 6 DPF Regeneration Panel Icon Description

Icon	Description
	Engine fault indicator
	NCD status indicator
	DPF exhaust temperature indicator
	DPF manual regeneration request indicator
	DPF regeneration inhibition indicator
	Driver alarm indicator / Low DEF level alarm indicator
	DPF regeneration response indicator

NOTE:

DPF: Diesel Particulate Filter

DEF: Diesel Exhaust Fluid

6.3 DPF MANUAL REGENERATION OPERATION

Configure an input port and set it as “DPF Manual Regeneration Request”, and connect it with a button (non-latching) externally;

Configure an input port and set it as “DPF Regeneration Inhibit”, and connect it with a button or a switch externally.

Press the ▼ key and hold it for 3 seconds on controller panel to enter the parameter setting menu. Press ▼ and select “DPF Regeneration” to enter the DPF regeneration panel. Controller screen is shown as Fig.3:

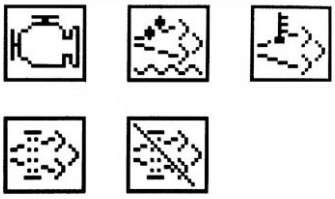

Fig.3 DPF Regeneration Panel

If the DPF regeneration status indicator stays on or flashes, it means that DPF manual regeneration is required. It is recommended that the operator should perform a parker regeneration. Controller screen is shown as Fig.4:

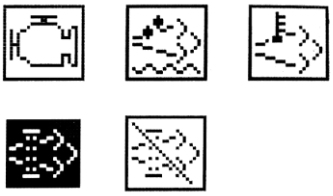

Fig.4 DPF Regeneration Request

Press the “DPF Manual Regeneration” button, if engine ECU detects that the current status meets the DPF regeneration condition, the DPF regeneration will be activated. The engine will enter the DPF regeneration process, DPF exhaust temperature indicator stays on. Controller screen is shown as Fig.5:

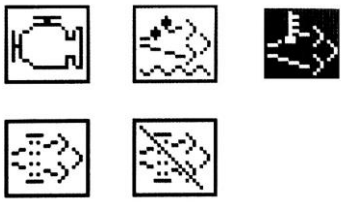

Fig.5 DPF Regeneration is Working

When manual regeneration is completed, DPF exhaust temperature indicator goes out.

If it needs to stop the DPF regeneration, press the “DPF Regeneration Inhibit” button, when the DPF regeneration inhibit is activated, DPF regeneration inhibition indicator will stay on.

7 PROTECTION

7.1 WARNINGS

When controller detects warning signal, it only issues warning, not shutdown. When alarm is removed, warning alarm is cleared automatically.

Table 7 Warnings

No.	Type	Description
1	Over Speed Warn	When controller detects speed is above the pre-set over speed warning threshold, it issues warning signal.
2	Under Speed Warn	When controller detects speed is below the pre-set under speed warning threshold, it issues warning signal.
3	Loss of Speed Signal	When controller detects speed is 0, and speed signal loss action is selected “Warning”, it issues warning signal.
4	Failed to Stop	When engine stop delay is over and engine doesn't stop completely, controller issues warning signal.
5	Charging Failure	When controller detects engine charger voltage is less than pre-set threshold, it issues warning alarm signal.
6	Battery Overvoltage	When controller detects engine battery voltage is larger than pre-set threshold, it issues warning alarm signal.
7	Battery Undervoltage	When controller detects engine battery voltage is less than pre-set threshold, it issues warning alarm signal.
8	ECU Warn	When controller receives warning signal of engine by J1939, it issues warning signal.
9	High Engine Temp. Warn	When controller detects engine ECU temperature value is higher than pre-set high temp warning value, it issues warning signal.
10	Low Engine Temp. Warn	When controller detects engine ECU temperature value is lower than pre-set low temp warning value, it issues warning signal.
11	Low Engine OP Warn	When controller detects engine ECU oil pressure value is below pre-set oil pressure warning value, it issues warning signal.
12	Aux. Sensor 1~5 Open	When controller detects sensor is open, and action type is selected as “Warning”, it issues warning signal.
13	Aux. Sensor 1~5 High	When controller detects sensor value is above pre-set upper limit of warning values, it issues warning signal.
14	Aux. Sensor 1~5 Low	When controller detects sensor value is below pre-set lower limit of warning values, it issues warning signal.
15	Aux. Sensor 4 Error	When controller detects the value of sensor 4 is out of the measurement range, it issues warning signal.
16	High Discharge Press.	When the sensor is correlated with discharge pressure sensor, if the discharge pressure value is above pre-set target pressure percentage, the controller issues warning signal.
17	Input 1~5 Warn	When digital input port is configured to “Warning”, and when it is active, it issues corresponding input warning signal.
18	Fuel Filter Time Over	When the pre-set maintenance time is due, and due action type is

SmartGen

No.	Type	Description
19	Fuel/Water Separator Time Over	selected as “Warning”, it issues warning signal.
20	Air Filter Time Over	
21	Lubricant Time Over	
22	Engine Oil Filter Time Over	
23	Engine Fuel Filter Time Over	
24	Engine Lubricant Time Over	
25	Engine Air Filter Time Over	
26	Maintenance 9 Over	
27	Maintenance 10 Over	

7.2 SHUTDOWNS

When controller detects shutdown alarm signal, it immediately stops. When engine stops completely, it needs to press manually Alarm Reset button to remove alarms.

Table 8 Shutdown Alarms

No.	Type	Description
1	Emergency Stop	When controller detects emergency stop alarm signal, it issues emergency stop alarm signal.
2	Overspeed Shut	When controller detects engine speed is over preset over speed stop threshold, it issues shutdown alarm signal.
3	Underspeed Shut	When controller detects engine speed is below preset under speed stop threshold, it issues shutdown alarm signal.
4	Loss of Speed Signal	When controller detects speed is 0, and speed signal loss action is selected "Shutdown", it issues shutdown alarm signal.
5	Failed to Start	When engine fails to start during pre-set start attempts, controller issues failed to start alarm signal.
6	ECU Shutdown	When controller receives shutdown alarm signal via J1939, it issues shutdown alarm signal.
7	Low Coolant Level Input Shut	When controller input port is set to Low Coolant Level Input and if it is active, it issues shutdown alarm signal.
8	High Temp. Input Shut	When controller input port is set to High Temp Shutdown Input and if it is active, it issues shutdown alarm signal.
9	Low Oil Press. Input Shut	When controller input port is set to Low Oil Pressure Shutdown Input and if it is active, it issues shutdown alarm signal.
10	ECU Comm. Failure Shut	When engine start is completed, but controller doesn't receive data via J1939, controller issues communication failure shutdown signal.
11	High Temp. Shutdown	When controller detects engine ECU temperature value is above pre-set shutdown value, it issues shutdown alarm signal.
12	Low OP Shutdown	When controller detects engine ECU oil pressure value is below pre-set shutdown value, it issues shutdown alarm signal.
13	Auxiliary Sensor 1~5 Open Shut	When controller detects sensor is open, and action type is selected “Shutdown”, it issues shutdown alarm signal.

No.	Type	Description
14	Auxiliary Sensor 1~5 High Shut	When controller detects sensor value is above pre-set upper shutdown limit value, it issues shutdown alarm signal.
15	Auxiliary Sensor 1~5 Low Shut	When controller detects sensor value is below pre-set lower shutdown limit value, it issues shutdown alarm signal.
16	High Discharge Press. Shut	When the sensor is correlated with discharge pressure sensor, if the discharge pressure value is above pre-set target pressure percentage, the controller issues shutdown signal.
17	Input 1~5 Shutdown	When digital input is configured to shutdown alarm, and if it is active, it issues corresponding input shutdown alarm signal.
18	Fuel Filter Time Over	When the pre-set maintenance time is due, and due action type is selected as “Shutdown”, it issues shutdown signal.
19	Fuel/Water Separator Time Over	
20	Air Filter Time Over	
21	Lubricant Time Over	
22	Engine Oil Filter Time Over	
23	Engine Fuel Filter Time Over	
24	Engine Lubricant Time Over	
25	Engine Air Filter Time Over	
26	Maintenance 9 Over	
27	Maintenance 10 Over	

NOTE: For ECU Warning and ECU Shutdown alarms, if detailed information is displayed, check the engine according to the information; otherwise, refer to engine user manual to get information according to SPN code.

SmartGen

8 WIRE CONNECTION

Fig.6 Controller Back Panel

Table 9 Connection Terminals Description

No.	Function	Size	Remark	
1	Aux. Input 1	0.5mm²	Active when it is grounded (B-).	See settings in Table 11.
2	Aux. Input 2	0.5mm²	Active when it is grounded (B-).	
3	Aux. Sensor 1	1.0mm²	If it is configured as sensor port, it connects with resistance type sensor; If it is configured as digital input, active when it is grounded (B-).	See settings in Table 12.
4	Aux. Sensor 2	1.0mm²		
5	Aux. Sensor 3	1.0mm²		
6	Aux. Sensor 4	1.0mm²	Configure by user (Resistance/current/voltage type).	
7	CAN L/MP2	0.5mm²	If the controller model is ACC1700: Two speed signal cables are connected to Terminal MP1 and MP2 of the controller respectively. Terminal MP2 has already connected to B- internally. If the controller model is ACC1700CAN: Terminal CANL and CANH are connected to the CAN port of engine. It has already connected to 120Ω termination resistor internally.	
8	CAN H/MP1	0.5mm²		
9	RS485 B(-)	0.5mm²	120Ω impedance shielded cable is recommended; One end of the shielded cable should be grounded.	
10	RS485 A(+)	0.5mm²		
11	Aux. Sensor 5	1.0mm²	It connects with current type sensor.	See settings in Table 12.
12	Aux. Output 1	1.0mm²	It is configured as active relay output, and powered by Terminal 18 (B+). Its contact	See setting in Table 10.
13	Aux. Output 2	1.0mm²		

No.	Function	Size	Remark
14	Aux. Output 3	1.0mm^2	rated capacity is 1A.
15	Aux. Output 4	1.0mm^2	It is configured as active relay output, and powered by Terminal 17 (B+). Its contact rated capacity is 1A.
16	Crank Output	1.0mm^2	It is configured as active relay output, and powered by Terminal 17 (B+). Its contact rated capacity is 1A.
17	E-Stop Input	1.5mm^2	Active when there is B+ voltage input. Connect with external emergency stop button (NC).
18	DC Power Input B+	1.5mm^2	Connect with the positive of starting battery.
19	DC Power Input B-	1.5mm^2	Connect with the negative of starting battery.

SmartGen

9 CONFIGURATION PARAMETER RANGE AND DEFINITION

9.1 PARAMETER RANGE AND DEFINITION

Table 10 Manufacturer Parameters Setting Contents and Range List

No.	Item	Range	Default	Description
Language				
1	Language	(0-1)	0	0: Simplified Chinese; 1: English.
LCD Backlight				
1	Contrast	(0-10)	5	Set LCD screen contrast.
2	Brightness	(0-5)	5	Set LCD backlight brightness.
3	Delay	(0-3600)min	5	Backlight is always on when delay is set as 0min.
Module Setting				
1	Module Address	(1-254)	1	Controller address for remote monitoring;
2	Password	(0-65534)	01234	It is used for advanced parameter setting; ⚠**CAUTION!** Default password is "01234"; It can be changed by operator to prevent others changing controller's advanced configuration. If password is changed, please remember it clearly. If it is forgotten, please contact SmartGen service personnel.
3	Maintenance Password	(0-65534)	01234	Independent password for maintenance setting.
4	Comm. Baud Rate	(0-2)	0	0: 9600bps; 1: 19200bps; 2: 38400bps.
5	Comm. Stop Bit	(1-2)	1	1: 1-bit Stop Bit; 2: 2-bit Stop Bit.
6	Comm. Parity Bit	(0-2)	0	0: None parity; 1: Odd parity; 2: Even parity.
7	Top-left Parameter Displayed in Home Page	(0-12)	0	0: Speed; 1: Engine temperature; 2: Engine oil pressure; 3: Fuel level; 4: Discharge pressure; 5: Discharge temperature; 6: Battery voltage; 7: D+ voltage; 8: Aux. sensor 1; 9: Aux. sensor 2; 10: Aux. sensor 3; 11: Aux. sensor 4; 12: Aux. sensor 5;
8	Top-right Parameter Displayed in Home Page	(0-12)	1	
9	Bottom-left Parameter Displayed in Home Page	(0-12)	4	
10	Bottom-right Parameter Displayed in Home Page	(0-12)	5	

SmartGen

No.	Item	Range	Default	Description
11	Boot-up Screen Time	(0-3600)s	2	
12	Bluetooth Enable	(0-1)	1	0: Disable; 1: Enable.
Timer Setting				
1	Preheat Delay	(0-3600)s	0	Time for pre-heating plug to be energized before starter is energized.
2	Prestart Fuel Time	(0-3600)s	1	Time for fuel relay output every time before starter is energized.
3	Cranking Time	(3-60)s	8	Time for starter to be energized every time.
4	Crank Rest Time	(3-60)s	10	Waiting time before second energization when engine fails to start.
5	Safety On Delay	(0-3600)s	10	During this time oil pressure low, temp. high, under speed, under frequency, under voltage, and charge alt failure alarms are all inactive.
6	Start Idle Time	(0-3600)s	10	Time for engine idle running in start process.
7	Warming Up Time	(0-3600)s	0	Warming up time for engine before normal running after high speed running.
8	Cooling Time	(0-3600)s	0	Cooling time before stop
9	Stop Idle Time	(0-3600)s	10	Time for engine idle running in stop process.
10	ETS Solenoid Hold	(0-3600)s	20	Time for ETS to be energized before stop.
11	Wait Stop Time	(0-3600)s	0	Time after idle running delay before complete stop when ETS Solenoid Hold is set 0; When it is not 0, it is time after ETS delay before complete stop.
12	After Stop Time	(0-3600)s	0	Time from complete stop to standby status.
13	Pre-lubrication Rest Time	(0-12)h	2	Interval time from the first pre-lubrication to the second pre-lubrication when output is configured as pre-lubrication in standby status; when it is set as 0, pre-lubrication will not output in standby status.
14	Pre-lubrication Time	(3-30)s	5	Time for pre-lubrication output when output is configured as pre-lubrication.
15	Manual Preheat Delay	(0-3600)s	0	Time for pre-heating output when it is on standby, and the manual preheat input is active.
Engine Setting				

SmartGen

No.	Item		Range	Default	Description
1	Engine Type		(0-39)	34	Default: non-ECU engine;
2	ECU Shutdown Enable		(0-1)	1	0: Disable; 1: Enable. **NOTE:** When it is enabled, if it detects the ECU alarm code is red light alarm, it will shut down.
3	ECU Communication Source Address		(0-255)	3	ECU communication source address.
4	Flywheel Teeth		(1.0-300.0)	118.0	Flywheel teeth of engine, used for starter disconnect conditions and engine speed detection; please refer to the below installation.
5	Engine Rated Speed		(0-6000)RPM	2200	Provide the judgement standard for overspeed, underspeed, and load speed.
6	Engine Idle Speed		(0-100)%	64.0	Set value is the percentage of rated speed; During the commissioning process, if idle running is needed, stabilize the speed at the set value.
7	Fixed Idle Speed		(0-2000)RPM	1350	Active when the set value is not 0. The idle speed is fixed to this value.
8	Start Attempts		(1-10)times	1	Maximum start times in case of failed start; when this number is reached, controller shall issue Failed to Start signal.
9	Crank Disconnect		(0-2)	2	Please refer to Table 13; There are two kinds of disconnect conditions for engine and starter. They can be used independently or together and the purpose is to separate starter motor and engine as soon as possible.
10	Disconnect Speed		(0-200)%	24	Set value is the percentage of rated speed; when speed is above the set value, starter shall disconnect; Please refer to the rear installation.
11	Disconnect OP		(0-1000)kPa	200	When Oil Pressure is above pre-set value, starter shall disconnect. Please refer to the following installation.
12	Overspeed Warning	Set	(0-200.0)%	110.0	Set value is the percentage of rated speed; Return value and delay value can also be set. Overspeed warning is enabled by default, underspeed warning is disabled by default.
		Return	(0-200.0)%	108.0	
		Delay	(0-3600)s	5	
13	Underspeed Warning	Set	(0-200.0)%	55.0	
		Return	(0-200.0)%	60.0	
		Delay	(0-3600)s	5	
14	Overspeed Shutdown	Set	(0-200.0)%	114.0	Set value is the percentage of rated speed; Delay value can also be set.
		Delay	(0-3600)s	2	

No.	Item		Range	Default	Description
15	Underspeed Shutdown	Set	(0-200.0)%	50.0	Overspeed shutdown is enabled by default, underspeed shutdown is disabled by default.
		Delay	(0-3600)s	3	
16	Loss of Speed Signal Delay		(0-3600)s	5	Time from detecting speed is 0 to confirming the action;
17	Loss of Speed Signal Action		(0-1)	0	0: Warning 1: Shutdown
18	Battery Rated Voltage		(0-60.0)V	24.0	Provide judgement standard for battery over/under voltage detection.
19	Battery Overvolt Warn	Set	(0-200)%	120	Set value is the percentage of battery rated voltage; Return value and delay value can also be set. Battery over/under voltage warning is enabled by default.
		Return	(0-200)%	115	
		Delay	(0-3600)s	60	
20	Battery Undervolt Warn	Set	(0-200)%	85	
		Return	(0-200)%	90	
		Delay	(0-3600)s	60	
21	Charging Failure	Set	(0-60.0)V	8.0	During engine normal running process, when charger D+ voltage is below this value, controller issues charging failure warning. It is enabled by default.
		Return	(0-60.0)V	10.0	
		Delay	(0-3600)s	10	
22	Preheat Correlated Temperature Enable		(0-1)	0	0: Disable; 1: Enable.
23	Preheat Correlated Temperature Setting		(0-300)°C	25	When it is enabled, if engine temperature is higher than set value in preheat period, after preheat is over, preheat output stops.
24	Start Idle Delay Correlated Temperature	Enable	(0-1)	0	0: Disable; 1: Enable.
		Set	(0-100)°C	40	When it is enabled, if engine temperature reaches the set value in start idle period, it will quit Start Idle Delay, and engine enters idle running.
		Sensor	(0-6)	0	0: Engine temperature; 1: Engine oil temperature; 2: Aux. sensor 1; 3: Aux. sensor 2; 4: Aux. sensor 3; 5: Aux. sensor 4; 6: Aux. sensor 5.
Air Compressor Setting					
1	Engine Unload Speed		(0-100.0)%	70.0	Set value is the percentage of engine rated rate. After loading, when the discharge pressure reaches rated pressure, the speed will be stabilized at this set value.
2	Engine Load Speed		(0-100.0)%	70.0	After pressing the load key, when

No.	Item		Range	Default	Description
					current speed reaches load speed, load control outputs.
3	Speed Up Rate Set		(30-500)r/s	200	The speed increased by revolutions per second.
4	Speed Down Rate Set		(30-500)r/s	200	The speed reduced by revolutions per second.
5	Overload Protection Set	Set	(0-200)%	90	When overload protection occurs, the air compressor reduces the speed and keeps it at stable speed. It is disabled by default.
		Return	(0-200)%	70	
		Delay	(0-3600)s	5	
6	Overload Speed Down Rate		(3-500)r/s	30	The speed reduced by revolutions per second.
7	Overload Stable Speed		(0-100.0)%	70.0	The percentage of rated speed; When overload protection occurs, the air compressor reduces the speed and keeps it at stable speed. It is disabled by default.
8	Target Pressure		(0-300.00)bar	7.00	Maximum pressure value when adjusting speed after loading.
9	Unload Action Pressure		(0-300.00)bar	6.00	Minimum pressure value when adjusting speed after loading.
10	Load Valve Auto Control		(0-1)	0	0: Disable; 1: Enable. When the non-ECU unit setting is enabled, press the load key, if discharge pressure is less than air compressor unload action pressure, load control outputs; if discharge pressure is larger than air compressor rated pressure, load control stops to output.
11	Overpressure Auto Unload	Enable	(0-1)	0	0: Disable; 1: Enable. When discharge pressure is higher than target value, load control disconnects; when it is lower than the set value, load control outputs.
		Set	(0-200.0)%	105.0	
		Return	(0-200.0)%	95.0	
		Delay	(0-3600)s	5	
12	Start Auto Load Enable		(0-1)	0	0: Disable; 1: Enable. When it is enabled, engine can automatically take load and enter high speed without pressing load key after starting.
13	Stop Pressure Detection	Enable	(0-1)	0	0: Disable; 1: Enable. When it is enabled, during the engine stop process, discharge pressure will be detected. If the discharge pressure is larger than set value, it will not stop. It stops until the pressure is lower than
		Set	(0-300.00)bar	3.00	

No.	Item		Range	Default	Description
					the set value.
Analog Sensor Setting					
Aux. Sensor 1					
1	Sensor Type		(0-4)	1	0: Not Used 1: Temperature Sensor 2: Pressure Sensor 3: Level Sensor 4: Digital Input
2	Curve Type		(0-15)	9	It depends on the sensor types, and default is SGD curve.
3	Open Action		(0-2)	0	0: Warning; 1: Shutdown; 2: No action.
4	Display Unit		(0-1)	0	0: °C; 1: °F. **NOTE**: Unit is different for different sensor.
5	Alarm Detection Range		(0-3)	0	0: After safety on delay 1: From crank 2: Always active 3: After loading
6	Over Shutdown	Enable	(0-1)	1	When external sensor value is larger than this value, controller issues shutdown alarm; Alarm enable and delay value can be set.
		Set	(0-9000)	98	
		Delay	(0-3600)	3	
7	Under Shutdown	Enable	(0-1)	0	When external sensor value is less than this value, controller issues shutdown alarm; alarm enable and delay value can be set.
		Set	(0-9000)	50	
		Delay	(0-3600)	3	
8	Over Warn	Enable	(0-1)	1	When external sensor value is larger than this value, controller issues warning alarm; alarm enable, return and delay values can be set.
		Set	(0-9000)	95	
		Return	(0-9000)	93	
		Delay	(0-3600)	5	
9	Under Warn	Enable	(0-1)	0	When external sensor value is less than this value, controller issues warning alarm; alarm enable, return and delay values can be set.
		Set	(0-9000)	70	
		Return	(0-9000)	75	
		Delay	(0-3600)	5	
10	Custom Curve				When custom resistance type sensor is selected, related curve setting is required.
11	Custom String Name				It can be modified via host PC, and default is “Engine Temperature”.
Aux. Sensor 2					
1	Sensor Type		(0-4)	2	0: Not Used 1: Temperature Sensor 2: Pressure Sensor

SmartGen

No.	Item		Range	Default	Description
					3: Level Sensor 4: Digital Input
2	Curve Type		(0-15)	9	It depends on the sensor types, and default is SGD curve.
3	Open Action		(0-2)	0	0: Warning; 1: Shutdown; 2: No action.
4	Display Unit		(0-2)	0	0: kPa; 1: bar; 2: psi. **NOTE**: Unit is different for different sensor.
5	Alarm Detection Range		(0-3)	0	0: After safety on delay 1: From crank 2: Always active 3: After loading
6	Over Shutdown	Enable	(0-1)	0	When external sensor value is larger than this value, controller issues shutdown alarm; Alarm enable and delay value can be set.
		Set	(0-9000)	1000	
		Delay	(0-3600)	3	
7	Under Shutdown	Enable	(0-1)	1	When external sensor value is less than this value, controller issues shutdown alarm; alarm enable and delay value can be set.
		Set	(0-9000)	103	
		Delay	(0-3600)	3	
8	Over Warn	Enable	(0-1)	0	When external sensor value is larger than this value, controller issues warning alarm; alarm enable, return and delay values can be set.
		Set	(0-9000)	950	
		Return	(0-9000)	900	
		Delay	(0-3600)	5	
9	Under Warn	Enable	(0-1)	1	When external sensor value is less than this value, controller issues warning alarm; alarm enable, return and delay values can be set.
		Set	(0-9000)	124	
		Return	(0-9000)	138	
		Delay	(0-3600)	5	
10	Custom Curve				When custom resistance type sensor is selected, related curve setting is required.
11	Custom String Name				It can be modified via host PC, and default is “Engine Oil Pressure”.
Aux. Sensor 3					
1	Sensor Type		(0-4)	3	0: Not Used 1: Temperature Sensor 2: Pressure Sensor 3: Level Sensor 4: Digital Input
2	Curve Type		(0-15)	6	It depends on the sensor types, and default is 4Ω-126Ω curve.
3	Open Action		(0-2)	0	0: Warning; 1: Shutdown; 2: No action.
4	Display Unit		(0-0)	0	0: %.

No.	Item		Range	Default	Description
					NOTE: Unit is different for different sensor.
5	Alarm Detection Range		(0-3)	2	0: After safety on delay 1: From crank 2: Always active 3: After loading
6	Over Shutdown	Enable	(0-1)	0	When external sensor value is larger than this value, controller issues shutdown alarm; Alarm enable and delay value can be set.
		Set	(0-9000)	100	
		Delay	(0-3600)	3	
7	Under Shutdown	Enable	(0-1)	0	When external sensor value is less than this value, controller issues shutdown alarm; alarm enable and delay value can be set.
		Set	(0-9000)	8	
		Delay	(0-3600)	3	
8	Over Warn	Enable	(0-1)	0	When external sensor value is larger than this value, controller issues warning alarm; alarm enable, return and delay values can be set.
		Set	(0-9000)	90	
		Return	(0-9000)	80	
		Delay	(0-3600)	5	
9	Under Warn	Enable	(0-1)	1	When external sensor value is less than this value, controller issues warning alarm; alarm enable, return and delay values can be set.
		Set	(0-9000)	10	
		Return	(0-9000)	15	
		Delay	(0-3600)	5	
10	Custom Curve				When custom resistance type sensor is selected, related curve setting is required.
11	Custom String Name				It can be modified via host PC, and default is “Fuel Level”.
Aux. Sensor 4					
1	Sensor Type		(0-3)	1	0: Not Used 1: Temperature Sensor 2: Pressure Sensor 3: Level Sensor
2	Curve Type		(0-15)	11	It depends on the sensor types, and default is PT100 curve.
3	Open Action		(0-2)	0	0: Warning; 1: Shutdown; 2: No action.
4	Display Unit		(0-1)	0	0: °C 1: °F **NOTE**: Unit is different for different sensor.
5	Alarm Detection Range		(0-3)	2	0: After safety on delay 1: From crank 2: Always active 3: After loading
6	Over Shutdown	Enable	(0-1)	1	When external sensor value is larger

No.	Item		Range	Default	Description
		Set	(0-9000)	98	than this value, controller issues shutdown alarm; Alarm enable and delay value can be set.
		Delay	(0-3600)	3	
7	Under Shutdown	Enable	(0-1)	0	When external sensor value is less than this value, controller issues shutdown alarm; alarm enable and delay value can be set.
		Set	(0-9000)	50	
		Delay	(0-3600)	3	
8	Over Warn	Enable	(0-1)	1	When external sensor value is larger than this value, controller issues warning alarm; alarm enable, return and delay values can be set.
		Set	(0-9000)	95	
		Return	(0-9000)	93	
		Delay	(0-3600)	5	
9	Under Warn	Enable	(0-1)	0	When external sensor value is less than this value, controller issues warning alarm; alarm enable, return and delay values can be set.
		Set	(0-9000)	70	
		Return	(0-9000)	75	
		Delay	(0-3600)	5	
10	Custom Curve				When custom resistance type sensor is selected, related curve setting is required. It can be set as resistance, current, or voltage type sensor curve.
11	Custom String Name				It can be modified via host PC, and default is “Discharge Temperature”.
Aux. Sensor 5					
1	Sensor Type		(0-3)	2	0: Not Used 1: Temperature Sensor 2: Pressure Sensor 3: Level Sensor
2	Curve Type		/	2	It only supports custom 4-20mA curve.
3	Open Action		(0-2)	0	0: Warning; 1: Shutdown; 2: No action.
4	Display Unit		(0-2)	1	0: kPa; 1: bar; 2: psi. **NOTE**: Unit is different for different sensor.
	Alarm Detection Range		(0-3)	2	0: After safety on delay 1: From crank 2: Always active 3: After loading
	Over Shutdown	Enable	(0-1)	1	When external sensor value is larger than this value, controller issues shutdown alarm; Alarm enable and delay value can be set.
		Set	(0-9000)	1500	
		Delay	(0-3600)	3	
	Under Shutdown	Enable	(0-1)	0	When external sensor value is less than this value, controller issues shutdown
		Set	(0-9000)	100	

No.	Item		Range	Default	Description
		Delay	(0-3600)	3	alarm; alarm enable and delay value can be set.
	Over Warn	Enable	(0-1)	1	When external sensor value is larger than this value, controller issues warning alarm; alarm enable, return and delay values can be set.
		Set	(0-9000)	1400	
		Return	(0-9000)	1300	
		Delay	(0-3600)	5	
	Under Warn	Enable	(0-1)	0	When external sensor value is less than this value, controller issues warning alarm; alarm enable, return and delay values can be set.
		Set	(0-9000)	200	
		Return	(0-9000)	300	
		Delay	(0-3600)	5	
	Custom Curve				When custom 4-20mA type sensor is selected, related curve setting is required.
	Custom String Name				It can be modified via host PC, and default is “Discharge Pressure”.
Engine Temperature Setting					
1	Signal Source Set		(0-5)	1	0: ECU; 1: Aux. sensor 1; 2: Aux. sensor 2; 3: Aux. sensor 3; 4: Aux. sensor 4; 5: Aux. sensor 5;
2	High Temp. Shutdown	Set	((-50)-300)°C	98	When engine temperature that ECU collects is larger than this value, controller issues high temperature shutdown alarm; This value is detected only after safety on delay. Delay value can be set. It is enabled by default.
		Delay	(0-3600)s	3	
3	High Temp. Warn	Set	((-50)-300)°C	95	When engine temperature that ECU collects is larger than this value, controller issues high temp. warning alarm; This value is detected only after safety on delay. Return and delay value can be set. It is enabled by default.
		Return	((-50)-300)°C	93	
		Delay	(0-3600)s	5	
4	Low Temp. Warn	Set	((-50)-300)°C	10	When engine temperature that ECU collects is less than this value, controller issues low temp. warning alarm; This value is detected always. Delay value and return value can be set. It is disabled by default
		Return	((-50)-300)°C	25	
		Delay	(0-3600)s	5	

No.	Item		Range	Default	Description
5	Heater Control	On	((-50)-300)°C	50	When collected temperature is less than this value, heater control outputs. It is disabled by default.
		Off	((-50)-300)°C	55	
		Max. Working Duration	(0-3600)min	60	
6	Cooler Control	On	((-50)-300)°C	95	When collected temperature is larger than this value, cooler control outputs. It is disabled by default.
		Off	((-50)-300)°C	92	
		Max. Working Duration	(0-3600)min	60	
Engine Oil Pressure Correlation Setting					
1	Signal Source Set		(0-5)	2	0: ECU; 1: Aux. sensor 1; 2: Aux. sensor 2; 3: Aux. sensor 3; 4: Aux. sensor 4; 5: Aux. sensor 5;
2	Low OP Shutdown	Set	(0-1000) kPa	103	When engine oil pressure that ECU collects is less than this value, controller issues low OP shutdown alarm. This value is detected only after safety on delay. Delay value can be set. It is enabled by default.
		Delay	(0-3600)s	3	
3	Low OP Warn	Set	(0-1000) kPa	124	When engine oil pressure that ECU collects is less than this value, controller issues low OP warning alarm. This value is detected only after safety on delay. Delay value and return value can be set. It is enabled by default.
		Return	(0-1000) kPa	138	
		Delay	(0-3600)s	5	
Fuel Level Sensor Setting					
1	Signal Source Set		(0-5)	3	0: Not used; 1: Aux. sensor 1; 2: Aux. sensor 2; 3: Aux. sensor 3; 4: Aux. sensor 4; 5: Aux. sensor 5;
2	Fuel Pump Control	On	(0-300)%	10	When external fuel level sensor value is less than this value, fuel pump control outputs. It is disabled by default.
		Off	(0-300)%	80	
		Max. Working Duration	(0-3600)s	60	
3	Fuel Tank Capacity Set		(0-10000)L	1000	It is disabled by default.
Discharge Pressure Sensor Setting					
1	Signal Source Set		(0-5)	5	0: Not used;

SmartGen

No.	Item		Range	Default	Description
					1: Aux. sensor 1; 2: Aux. sensor 2; 3: Aux. sensor 3; 4: Aux. sensor 4; 5: Aux. sensor 5;
2	High Pressure Shutdown Target Percentage	Set	(0-300)%	120.0	When external sensor value is larger than the set percentage of target discharge pressure, controller issues shutdown alarm; Alarm enable and delay value can be set. It is disabled by default.
		Delay	(0-3600)s	5	
3	High Pressure Warn Target Percentage	Set	(0-300.0) %	110.0	When external sensor value is larger than set percentage of target discharge pressure, controller issues warning alarm; Alarm enable and delay value can be set. It is disabled by default.
		Return	(0-300.0) %	90.0	
		Delay	(0-3600)s	5	
Discharge Temperature Correlation Setting					
1	Correlated Sensor Set		(0-5)	4	0: Not used; 1: Aux. sensor 1; 2: Aux. sensor 2; 3: Aux. sensor 3; 4: Aux. sensor 4; 5: Aux. sensor 5.
Screw Oil Cooler Control Setting					
1	Screw Oil Cooler Control 1 Setting	On	(0-300)°C	80	According to the current discharge temperature, when temperature is higher than this value, screw oil cooler control 1 will output, off temperature and working duration can be set. It is disabled by default.
		Off	(0-300)°C	75	
		Max. Working Duration	(0-3600) min	0	
2	Screw Oil Cooler Control 2 Setting	On	(0-300)°C	80	According to the current discharge temperature, when temperature is higher than this value, screw oil cooler control 2 will output, off temperature and working duration can be set. It is disabled by default.
		Off	(0-300)°C	75	
		Max. Working Duration	(0-3600) min	0	
Digital Input Ports					
Digital Input 1					
1	Contents Setting		(0-53)	3	Alarm Reset; Please refer to Table 11 for details.
2	Active Type		(0-1)	0	0: Close 1: Open
Digital Input 2					
1	Contents Setting		(0-53)	26	High Temp. Shutdown Input; Please refer to Table 11 for details.

No.	Item	Range	Default	Description
2	Active Type	(0-1)	0	0: Close 1: Open
Digital Input 3				
1	Contents Setting	(0-53)	27	Low Oil Pressure Shutdown Input; Please refer to Table 11 for details.
2	Active Type	(0-1)	0	0: Close 1: Open
Digital Input 4				
1	Contents Setting	(0-53)	0	Users defined; Please refer to Table 11 for details.
2	Active Type	(0-1)	0	0: Close 1: Open
3	Active Range	(0-3)	2	0: After safety on delay 1: From crank 2: Always active 3: Inactive
4	Active Action	(0-2)	0	0: Warning 1: Shutdown 2: Indication
5	Active Delay	(0-20.0)s	2.0	Time from detecting input is active to confirm;
6	Input Description			Users defined.
Digital Input 5				
1	Contents Setting	(0-53)	0	Users defined; Please refer to Table 11 for details.
2	Active Type	(0-1)	0	0: Close 1: Open
3	Active Range	(0-3)	2	0: After safety on delay 1: From crank 2: Always active 3: Inactive
4	Active Action	(0-2)	1	0: Warning 1: Shutdown 2: Indication
5	Active Delay	(0-20.0)s	2.0	Time from detecting input is active to confirm;
6	Input Description			Users defined.
Auxiliary Output Ports				
Aux. Output 1				
1	Contents Setting	(0-119)	26	Load control; Please refer to Table 10 for details.
2	Output Type	(0-1)	0	0: Normally Open 1: Normally Close
Aux. Output 2				
1	Contents Setting	(0-119)	42	Common alarm; Please refer to Table 10 for details.
2	Output Type	(0-1)	0	0: Normally Open 1: Normally Close
Aux. Output 3				
1	Contents Setting	(0-119)	30	Idle control; Please refer to Table 10 for details.
2	Output Type	(0-1)	0	0: Normally Open 1: Normally Close
Aux. Output 4				
1	Contents Setting	(0-119)	29	Fuel relay output;

No.	Item	Range	Default	Description
				Please refer to Table 10 for details.
2	Output Type	(0-1)	0	0: Normally Open 1: Normally Close
Alternate Configuration Setting				
Alternate Configuration 1				
1	Enable	(0-1)	0	0: Disable 1: Enable
2	Engine Rated Speed	(0-6000)RPM	2200	When it is enabled, if the input is configured to "Alt Config. 1 Active", and it is active, speed shall be adjusted according to alternate configuration settings after loading.
3	Engine Idle Speed	(0-100.0)%	64.0	
4	Engine Unload Speed	(0-100.0)%	70.0	
5	Air Com. Target Pressure	(0-300.00) bar	7.00	
6	Air Com. Unload Act Press	(0-300.00) bar	6.00	
7	Engine Load Speed	(0-100)%	70	
8	Overload Stable Speed	(0-100.0)%	70.0	The percentage of rated speed; When overload protection occurs, the air compressor reduces the speed and keeps it at stable speed.
Alternate Configuration 2				
1	Enable	(0-1)	0	0: Disable 1: Enable
2	Engine Rated Speed	(0-6000)RPM	2200	When it is enabled, if the input is configured to "Alt Config. 2 Active", and it is active, speed shall be adjusted according to alternate configuration settings after loading.
3	Engine Idle Speed	(0-100.0)%	64.0	
4	Engine Unload Speed	(0-100.0)%	70.0	
5	Air Com. Target Pressure	(0-300.00) bar	7.00	
6	Air Com. Unload Act Press	(0-300.00) bar	6.00	
7	Engine Load Speed	(0-100)%	70	
8	Overload Stable Speed	(0-100.0)%	70.0	The percentage of rated speed; When overload protection occurs, the air compressor reduces the speed and keeps it at stable speed.
Alternate Configuration 3				
1	Enable	(0-1)	0	0: Disable 1: Enable
2	Engine Rated Speed	(0-6000)RPM	2200	When it is enabled, if the input is configured to "Alt Config. 3 Active", and it is active, speed shall be adjusted according to alternate configuration settings after loading.
3	Engine Idle Speed	(0-100.0)%	64.0	
4	Engine Unload Speed	(0-100.0)%	70.0	
5	Air Com. Target Pressure	(0-300.00) bar	7.00	
6	Air Com. Unload Act Press	(0-300.00) bar	6.00	
7	Engine Load Speed	(0-100)%	70	
8	Overload Stable Speed	(0-100.0)%	70.0	The percentage of rated speed; When overload protection occurs, the air compressor reduces the speed and keeps it at stable speed.
Maintenance Setting				
1	Fuel Filter Set	(0-1)	0	0: Disable 1: Enable Maintenance time, maintenance time due action, pre-maintenance time, pre-maintenance time due action,
2	Fuel/Water Separator Set	(0-1)	0	
3	Air Filter Set	(0-1)	0	
4	Lubricant Set	(0-1)	0	

No.	Item	Range	Default	Description
5	Engine Oil Filter Set	(0-1)	0	maintenance time reset can also be set; After maintenance, maintenance time due alarm can be removed by resetting maintenance time; Please refer to Table 14 for details.
6	Engine Fuel Filter Set	(0-1)	0	
7	Engine Lubricant Set	(0-1)	0	
8	Engine Air Filter Set	(0-1)	0	
9	Maintenance 9 Set	(0-1)	0	
10	Maintenance 10 Set	(0-1)	0	
ECU Information Display Setting				
1	ECU Info Smart Display	(0-1)	1	0: Disable (It displays "###" if ECU doesn't send data); 1: Enable (It doesn't display anything if ECU doesn't send data)
2	Oil Temperature	(0-1)	1	0: Not display; 1: Display (If Smart Display is active, it doesn't display anything if no data is received).
3	Fuel Temperature	(0-1)	1	
4	Fuel Pressure	(0-1)	1	
5	Air Inlet Temperature	(0-1)	1	
6	Exhaust Outlet Temperature	(0-1)	1	
7	Turbo Pressure	(0-1)	1	
8	Coolant Pressure	(0-1)	1	
9	Coolant Level	(0-1)	1	
10	Fuel Consumption	(0-1)	1	
11	Total Fuel Consumption	(0-1)	1	
12	Engine Load Ratio	(0-1)	1	
13	Torque Percentage	(0-1)	1	
14	Water in Fuel	(0-1)	1	
15	Ash Percentage	(0-1)	1	

CAUTION:

— Please modify the controller's internal parameters in standby status (such as crank disconnect condition, auxiliary input/output, delay setting, etc.), otherwise shutdown or abnormal situation may occur;

NOTES:

— When setting parameter on PC software, it doesn't need to input default password "01234" if not changed. If it is the first time to do configuration on PC after the password has been changed, then it needs to enter module password in password input screen.

— The value of high threshold must be larger than the low threshold, otherwise there will be both excessively high and excessively low conditions.

— When setting warnings, please set the correct return value, otherwise it will not issue warnings normally. When setting high warnings, the return value should be less than the set value; When setting low warnings, the return value should be larger than the set value;

— Auxiliary input ports cannot be set as the same functions. Otherwise, function shall not work normally; Auxiliary output ports can be set as the same functions;

SmartGen

9.2 DEFINABLE CONTENTS OF AUXILIARY OUTPUT PORTS 1~4

9.2.1 DEFINABLE CONTENTS OF AUXILIARY OUTPUT PORTS 1~4

Table 11 Definable Contents of Auxiliary Output Ports 1~4

No.	Type	Function Description
0	Not Used	
1	Custom Period 1	Please refer to the following contents for function details.
2	Custom Period 2	
3	Custom Period 3	
4	Custom Period 4	
5	Custom Period 5	
6	Custom Period 6	
7	Custom Combined 1	
8	Custom Combined 2	
9	Custom Combined 3	
10	Custom Combined 4	
11	Custom Combined 5	
12	Custom Combined 6	
13	Reserved	
14	Reserved	
15	Air Flap Control	Act at the time of over speed shutdown alarm and emergency stop; Air flap can be closed to close the engine intake and realize fast stop.
16	Audible Alarm	Act at the time of warning and shutdown alarms; Buzzer can be connected externally; It can be inhibited to output when input port “Alarm Mute” is active; When there is new warning or shutdown alarm, it outputs again.
17	Louver Control	Act at the time of engine start; Disconnect after engine stop.
18	Fuel Pump Control	Act by fuel pump control upper and lower limits of fuel level sensor.
19	Heater Control	Act by heater control upper and lower limits of temp. sensor.
20	Cooler Control	Act by cooler control upper and lower limits of temp. sensor.
21	Pre-lubrication	Under standby status, pre-lubrication output port is active and it outputs circularly according to pre-set “Pre-lubrication Rest Time” and “Pre-lubrication Time”; If “Pre-lubrication Rest Time” is 0h, then it doesn't output; Before start, pre-set pre-lubrication time is outputted; If pre-heat time is not configured, pre-lubrication outputs; If pre-heat time is configured, then pre-heat phase outputs.
22	Screw Oil Cooler Control 1	When the current discharge temperature is higher than cooler control 1 open value, it will output; when the value is lower than close value, it stops output.
23	Pre-lubricate	Act at the phase of pre-heating, fuel, start, and start rest time.
24	Remote Control	Controlled by communication port RS485.

No.	Type	Function Description
25	Screw Oil Cooler Control 2	When the current discharge temperature is higher than cooler control 2 open value, it will output; when the value is lower than close value, it stops output.
26	Load Control	Load/Unload key is pressed or load control input is active, then load control outputs; If load/unload key is pressed again or load input is inactive, then load control stops outputting.
27	Reserved	
28	Starting Relay	Act at engine start; and disconnect after successful start.
29	Fuel Relay	Act at engine start; and disconnect at ETS stop.
30	Idle Control	Used for engine with idle speed; Pull in before start, and disconnect at entering warming up time; Pull in at the process of stop idle speed, and disconnect when engine stops completely.
31	Speed Raise Output	Act in warming up period, and controlled by speed regulator in normal running period.
32	Speed Drop Output	Act from stop idle to waiting for stop period and controlled by speed regulator in normal running period.
33	Energize to Stop	Used for engine with stop ETS; Pull in when stop idle speed is over, and disconnect when pre-set “ETS Solenoid Hold” is over.
34	Run Key Switch Control	Used for checking ECU data once at power on; it outputs once it is power on; it stops outputting the signal at ETS stop time and failed to stop time;.
35	ECU Stop	Applicable for engine supporting ECU, and used to control ECU stop.
36	ECU Power Supply	Applicable for engine supporting ECU, and used to control ECU power.
37	Reserved	
38	Crank Success	Pull in when it detects crank success signal.
39	Normal Running	Pull in and output when it is in normal running period.
40	Reserved	
41	Reserved	
42	Common Alarm	Act at the time of common alarm and common shutdown.
43	Common Shutdown	Act at the time of common shutdown.
44	Common Warning	Act at the time of common warning.
45	Reserved	
46	Battery Overvolt	Act when battery voltage high warning occurs.
47	Battery Undervolt	Act when battery voltage low warning occurs.
48	Failed to Charge	Act when failed to charge warning occurs.
49	Preheat	Output in preheat period.
50	ECU Warning	ECU issued a warning alarm signal.
51	ECU Shutdown	ECU issued a shutdown alarm signal.
52	ECU Comm. Failure	Controller cannot communicate with ECU.
53	Reserved	
54	NCD Indicator Output	DPF regeneration related lamp outputs of Stage IV engine.
55	Regen Request Indicator	

No.	Type	Function Description
56	Regen Inhibit Indicator	
57	Exhaust Temp Indicator	
58	Regen Response Indicator	
59	Input 1 Active	Act when input port 1 is active.
60	Input 2 Active	Act when input port 2 is active.
61	Input 3 Active	Act when input port 3 is active.
62	Input 4 Active	Act when input port 4 is active.
63	Input 5 Active	Act when input port 5 is active.
64	Alternate Config. 1	Act when alternate configuration 1 is enabled, and the input is active.
65	Alternate Config. 2	Act when alternate configuration 2 is enabled, and the input is active.
66	Alternate Config. 3	Act when alternate configuration 3 is enabled, and the input is active.
67	Emergency Stop	Act when emergency stop alarm occurs.
68	Failed to Start	Act when failed to start alarm occurs.
69	Failed to Stop	Act when failed to stop alarm occurs.
70	Under Speed Warn	Act when engine under speed warning occurs.
71	Under Speed Shutdown	Act when engine under speed shutdown occurs.
72	Over Speed Warn	Act when engine over speed warning occurs.
73	Over Speed Shutdown	Act when engine over speed shutdown occurs.
74	Reserved	
75	Reserved	
76	Load Control 1	When “Alt Config. 1 Active” is active, under normal running status, load control 1 outputs.
77	Load Control 2	When “Alt Config. 2 Active” is active, under normal running status, load control 2 outputs.
78	Load Control 3	When “Alt Config. 3 Active” is active, under normal running status, load control 3 outputs.
79	High Temp Warning	Act when high temp. warning alarm occurs.
80	Low Temp Warning	Act when low temp. warning alarm occurs.
81	High Temp Shutdown	Act when high temp. shutdown alarm occurs.
82	Reserved	
83	Engine Low OP Warn	Act when low oil pressure warning occurs.
84	Engine Low OP Shut	Act when low oil pressure shutdown occurs.
85	Reserved	
86	Reserved	
87	Reserved	
88	Reserved	
89	Reserved	
90	Reserved	
91	Reserved	
92	Reserved	
93	Auxiliary Sensor 1 High Warn	Act when sensor 1 high warning occurs.

smartgen

No.	Type	Function Description
94	Auxiliary Sensor 1 Low Warn	Act when sensor 1 low warning occurs.
95	Auxiliary Sensor 1 High Shut	Act when sensor 1 high shutdown occurs.
96	Auxiliary Sensor 1 Low Shut	Act when sensor 1 low shutdown occurs.
97	Auxiliary Sensor 2 High Warn	Act when sensor 2 high warning occurs.
98	Auxiliary Sensor 2 Low Warn	Act when sensor 2 low warning occurs.
99	Auxiliary Sensor 2 High Shut	Act when sensor 2 high shutdown occurs.
100	Auxiliary Sensor 2 Low Shut	Act when sensor 2 low shutdown occurs.
101	Auxiliary Sensor 3 High Warn	Act when sensor 3 high warning occurs.
102	Auxiliary Sensor 3 Low Warn	Act when sensor 3 low warning occurs.
103	Auxiliary Sensor 3 High Shut	Act when sensor 3 high shutdown occurs.
104	Auxiliary Sensor 3 Low Shut	Act when sensor 3 low shutdown occurs.
105	Auxiliary Sensor 4 High Warn	Act when sensor 4 high warning occurs.
106	Auxiliary Sensor 4 Low Warn	Act when sensor 4 low warning occurs.
107	Auxiliary Sensor 4 High Shut	Act when sensor 4 high shutdown occurs.
108	Auxiliary Sensor 4 Low Shut	Act when sensor 4 low shutdown occurs.
109	Auxiliary Sensor 5 High Warn	Act when sensor 5 high warning occurs.
110	Auxiliary Sensor 5 Low Warn	Act when sensor 5 low warning occurs.
111	Auxiliary Sensor 5 High Shut	Act when sensor 5 high shutdown occurs.
112	Auxiliary Sensor 5 Low Shut	Act when sensor 5 low shutdown occurs.
113	Reserved	
114	Reserved	
115	Reserved	
116	Reserved	
117	Reserved	
118	Reserved	
119	Reserved	

⚠NOTE: After pressing the emergency stop button, the power of crank output and auxiliary output 4 will be disconnected. When doing configuration, please note that the function of ETS solenoid hold after stop should not be configured to the auxiliary output 4.

SmartGen

9.2.2 CUSTOM PERIOD OUTPUT

Custom period output is composed by 2 parts: period output S1 and condition output S2.

S1 and S2 both are true, then it outputs; S1 or S2 is false, it doesn't output;

Period output S1 can be configured randomly to one, or several period outputs; Delay time and output time after entering period can be set;

Condition output S2 can be any contents of output settings.

NOTE: When period output S1 delay time and output time are both 0, configurations of period output S1 are both true.

EXAMPLE:

Output period: Start

Delay output time: 2s

Output time: 3s

Condition output contents: Input 1 is active;

Condition output active/inactive close; close when active (disconnect when inactive)

When input port 1 is active, and it enters start time and delays for 2s, custom period output starts to output, after outputting for 3s, it stops outputting;

When input port 1 is inactive, custom output doesn't output.

9.2.3 CUSTOM COMBINATION OUTPUT

Custom combination output is composed by 3 parts: OR condition output S1, OR condition output S2, AND condition output S3.

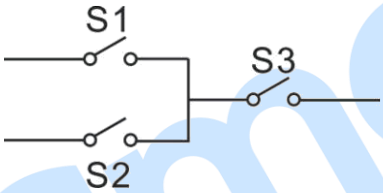

S1 or S2 is true, and S3 is true, then combination output works.

S1 and S2 both are false, or S3 is false, then combination output doesn't work.

NOTE: S1, S2 and S3 can be any contents except itself custom combination output of the output settings.

NOTE: S1, S2 and S3 cannot include or recursively include itself.

EXAMPLE:

Contents of OR condition output S1: input port 1 is active;

Close when OR condition output S1 is active/inactive: close when active (disconnect when inactive);

Contents of OR condition output S2, input port 2 is active;

Close when OR condition output S2 is active/inactive: close when active (disconnect when inactive);

Contents of AND condition output S3: input port 3 is active;

Close when AND condition output S3 is active/inactive: close when active (disconnect when inactive);

When input port 1 is active or input port 2 is active, if input port 3 is active, custom combination output is working; if input port 3 is inactive, custom combination output is not working;

When input port 1 is inactive and port 2 is inactive, no matter port 3 is active or not, custom combination output is not working.

9.3 DEFINABLE CONTENTS OF DIGITAL INPUT PORTS

Table 12 Definable Contents of Digital Input Ports

No.	Type	Function Description
0	Users Configured	Users can define the following functions: Indication: indicate only, no warning or shutdown. Warning: warning only, no shutdown. Shutdown: alarm and shutdown immediately Inactive: input is inactive. Always: input is active all the time. From crank: start to detect at the time of start. After safety on delay: start to detect after safety on delay.
1	Reserved	
2	Alarm Mute	Prohibit output configurations “Audible Alarm” outputs when input is active.
3	Alarm Reset	Reset shutdown alarm when input is active.
4	Reserved	
5	Lamp Test	All LED indicators are illuminated when input is active.
6	Panel Lock	All buttons in panel are inactive except DOWN key. Parameters cannot be configured. But users can set language, check event log and controller information. There is 🔒 in the bottom right corner on LCD when input is active.
7	Crank Success Input	When this function is active, it means the engine is started successfully. If this function is configured, the speed and oil pressure of crank success conditions will be invalid.
8	Reserved	
9	Reserved	
10	Reserved	
11	Reserved	
12	Reserved	
13	Reserved	
14	Reserved	
15	Reserved	
16	DPF Manual Regeneration Request	A button can be connected externally (non-latching); For engine with Stage IV standard, if PDF regeneration is needed, press the button and controller shall issue manual request command to ECU.
17	DPF Regeneration Inhibit	For engine with Stage IV standard, if DPF regeneration Inhibit is needed, so when input is active, controller issues inhibition command to ECU.
18	Reserved	
19	Reserved	
20	Reserved	
21	Alarm Stop Inhibit	All shutdown alarms are inhibited except emergency stop and over speed shutdown. (Override mode)
22	Instrument Mode	All outputs are inhibited in this mode.

No.	Type	Function Description
23	Reserved	
24	Reset Maintenance	Controller will set the time of maintenance 1 as default value when input is active.
25	External Charging Failure	When input is active, failed to charge warning alarm occurs.
26	High Temp Shutdown	Connects to sensor digital input.
27	Low OP Shutdown	Connects to sensor digital input.
28	Reserved	
29	Low Coolant Level Shutdown	Connects to sensor digital input.
30	Reserved	
31	Reserved	
32	Manual Start Input	When input is active, engine can be started automatically; when input is inactive, engine can be stopped automatically.
33	Reserved	
34	Simulate Stop key	An external button (non-latching) can be connected and pressed as simulate panel.
35	Simulate Load/Unload key	An external button (non-latching) can be connected and pressed as simulate panel.
36	Reserved	
37	Simulate Start key	An external button (non-latching) can be connected and pressed as simulate panel.
38	Reserved	
39	Reserved	
40	Reserved	
41	Reserved	
42	Alt Config. 1 Active	When input port is active, configuration is active; Different parameters can be set for it, making convenience for users to choose current configuration by input port.
43	Alt Config. 2 Active	
44	Alt Config. 3 Active	
45	Reserved	
46	Reserved	
47	Load Input	Act between start idle and stop idle; When input is active, load control outputs; When it is inactive, load control stops outputting.
48-52	Reserved	
53	Manual Pre-heat	Connects to manual pre-heat digital input.

9.4 SELECTION OF SENSORS

Table 13 Sensors Selection

No.	Items	Description	Remark
1	Temperature Sensor	0: Not used 1: Custom Res Curve 2: Custom (4-20)mA Curve 3: Custom Volt Curve 4: VDO 5: CURTIS 6: VOLVO-EC 7: DATCON 8: SGX 9: SGD 10: SGH 11: PT100 12: Cu50 13-15: Reserved	Custom resistance input range is (0~6)kΩ; Custom current input range is (4.0~20.0)mA; Custom voltage input range is (0~5.0)V; Users can select the corresponding curve by themselves. If pre-set sensor channel doesn't support current, and voltage type, then curve type item 2 and 3 will display “Reserved”.
2	Oil Pressure Sensor	0: Not used 1: Custom Res Curve 2: Custom (4-20)mA Curve 3: Custom Volt Curve 4: VDO 10bar 5: CURTIS 6: VOLVO-EC 7: DATCON 10bar 8: SGX 9: SGD 10: SGH 11-15: Reserved	Custom resistance input range is (0~6)kΩ; Custom current input range is (4.0~20.0)mA; Custom voltage input range is (0~5.0)V; Users can select the corresponding curve by themselves. If pre-set sensor channel doesn't support current, and voltage type, then curve type item 2 and 3 will display “Reserved”.
3	Fuel Level Sensor	0: Not used 1: Custom Res Curve 2: Custom (4-20)mA Curve 3: Custom Volt Curve 4: SGD 5: SGH 6: 4-126Ω 7: 0-130Ω 8: 0-190Ω 9: 10-180Ω 10: 10-120Ω 11-15: Reserved	Custom resistance input range is (0~6)kΩ; Custom current input range is (4.0~20.0)mA; Custom voltage input range is (0~5.0)V; Users can select the corresponding curve by themselves. If pre-set sensor channel doesn't support current, and voltage type, then curve type item 2 and 3 will display “Reserved”.

SmartGen

9.5 CONDITIONS OF CRANK DISCONNECT SELECTION

Table 14 Crank Disconnect Conditions

No.	Settings
0	Engine Speed
1	Oil pressure
2	Oil pressure + Engine Speed

NOTES:

— There are 3 conditions to make starter disconnected with engine. Engine speed and oil pressure can be used separately. We recommend that oil pressure should be used with speed sensor together, in order to make the starter motor disconnect with engine immediately and can check crank disconnect exactly;

— Speed sensor is the magnetic equipment installed in starter for detecting flywheel teeth;

— When set it speed sensor, users must ensure that the number of flywheel teeth is the same as settings, otherwise, “over speed shutdown” or “under speed shutdown” may be caused;

— If the unit doesn't have speed sensor please don’t select corresponding items, otherwise, shutdown alarms of “start failure” or “loss speed signal” may be caused;

— If the unit doesn’t have oil pressure sensor, please don’t select corresponding items.

SmartGen

9.6 MAINTENANCE SETTING

Table 15 Maintenance Setting

Item	Content	Description
Enable Choose	0: Disabled, 1: Enabled	Set maintenance function active or not;
Maintenance Time	(0-30000)h	It is the number of hours from the time the maintenance is enabled to when maintenance is required.
Maintenance Due Action	0: No Action; 1: Warning; 2: Shutdown; 3: Indication.	Alarm action when maintenance left time is 0.
Maint. Timing Method	Running Time	The timing of maintenance.
Pre-maint. Time	(0-30000)h	
Pre-maint. Due Action	0: No Action; 1: Warning; 2: Shutdown; 3: Indication.	Alarm action when pre-maintenance left time is 0.
Reset Maintenance		After maintenance completion, through this item reset maintenance time.
Maintenance Description		The string name of maintenance description can be set by maintenance 9 and 10; Users can input maintenance name, like Change Engine Oil.

SmartGen

10 PARAMETERS SETTING

Press key and hold it for 3 seconds to enter the setting menu after the controller is powered on. The menu list is as below:

>Return
>Parameters Set
>Maintenance Set
>Lock Set
>DPF Regen. Panel
>Language
>LCD Backlight Set
>Event Logs
>Controller Info

Select "Parameters Set" and input correct password (default: 01234) to enter the parameters setting interface.

Corresponding function of keys in parameter setting interface:

Confirm key; Up key; Return key; Down key.

Parameters Set >Return >Module Set >Timers Set >Engine Set	Screen 1: Enter setting menu, press Up/Down key to change setting items, press Confirm key to enter setting interface (Screen 2), press Return key to go back to previous menu. Or select "Return" by pressing Up/Down key and Confirm key to go back to previous menu.
Timers Set >Return >Preheat Delay >Prestart Fuel Time >Cranking Time	Screen 2: Press Up/Down key to change settings, press Confirm key to enter setting interface (Screen 3), press Return key to return (Screen 1). Or select "Return" by pressing Up/Down key and press Confirm key to go back to the previous menu (screen 1).
Preheat Delay 00000s	Screen 3: Press Confirm key and move the cursor, select the value and press Up/Down key to modify it. Press Confirm key to save your modification. Then press Down key to return (Screen 2).
Timers Set >Return >Preheat Delay >Prestart Fuel Time >Cranking Time	Screen 4: Press Down key, select and modify the value (it is the same method as Screen 2 and Screen 3).
Over Shutdown Enable Choose: Enabled Set Val: 00098°C Delay 00003s	Screen 5: Set temp. sensor shutdown parameters. Select >Over Shutdown, press Confirm key to enter setting menu, then press Confirm key again to enter Screen 5, press Up/Down key to select settings, then press Confirm key to save and meanwhile the cursor will move down (as Screen 6 shows).

Over Shutdown Enable Choose: Enabled Set Val: 00098°C Delay 00003s	Screen 6: Press Up/Down key to change the value, then press Confirm key to next bit. After setting is finished, press Confirm key to enter delay setting. If it does not need to modify, press Return key to go back to the previous menu.

11 SENSOR SETTING

- If a sensor is needed to change again, the sensor curve will be transferred into the standard value. For example, if the default temperature sensor is SGD, the sensor curve is SGD curve; if it is set SGX, the temperature sensor curve is SGX curve.
- If there is difference between standard sensor curve and the used sensor, users can choose “defined sensor”, and input defined sensor curve.
- At the time of inputting the sensor curve, X value must be inputted from small to large, otherwise, some mistake may occur.
- If sensor is selected to “Not Used”, then sensor curve doesn't work.
- If corresponding sensor only has alarm switch, then it is a must that set the sensor “Not Used”, otherwise shutdown alarm or warning may occur.
- It is applicable to set the headmost and backmost values in the vertical coordinate as the same as the Figure 7.

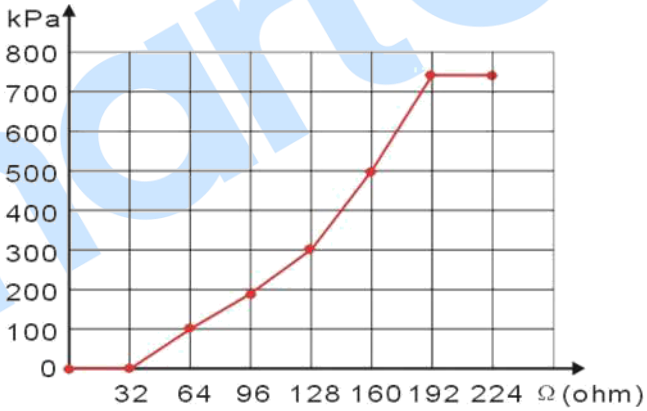

Fig.7 Sensor Curve Setting

Table 16 Common Pressure Unit Conversion Table

Item	N/m^2 (pa)	kgf/cm^2	bar	(p/in^2.psi)
1Pa	1	1.02x10^{-5}	1x10^{-5}	1.45x10^{-4}
1kgf/cm^2	9.8x10^4	1	0.98	14.2
1bar	1x10^5	1.02	1	14.5
1psi	6.89x10^3	7.03x10^{-2}	6.89x10^{-2}	1

12 COMMUNICATION CONFIGURATION AND CONNECTION

12.1 DESCRIPTION

ACC1700/ACC1700CAN diesel air compressor controller has a RS485 communication port. The port allows connection to an open local area network. It uses the Modbus communication protocol, and realize the Three Remote function (remote control, remote measurement, and remote communication) of the diesel air compressor through software on a PC or data acquisition system.

For more specific information of the communication protocol, please refer to the ACC1700_ACC1700CAN Communication Protocol.

12.2 RS485 COMMUNICATION DESCRIPTION

Communication Protocol: Modbus-RTU

Communication Parameters

Module Address: 1 (Range: 1-254)

Baud Rate: 9600bps(9600/19200bps/38400bps)

Data Bit: 8-bit

Parity Bit: None (None parity, odd parity, even parity)

Stop Bit: 1-bit (1-bit or 2-bit)

12.3 TERMINATION RESISTOR

At the ends of the linear network (the two communication ports that are the farthest apart), termination resistors of 120 ohms should be connected in parallel. According to transmission line theory, the termination resistors can absorb the reflected waves on the network and effectively enhance the signal strength. The value of the combined termination resistors should be approximately equal to the characteristic impedance of the transmission line at the communication frequency.

A reliable RS-485 network typically uses termination resistors. They may not be needed when the network cable is very short, temporary, or for laboratory testing.

13 COMMISSIONING

It is suggested to do the following examination before formal system operation:

a) Check all the connections are correct and wire diameter is suitable.

b) Ensure that controller DC power has fuse, controller's positive and negative are correctly connected to starting battery.

c) Take proper action to prevent engine from crank disconnect (e. g. Remove the connection wire of fuel valve). If everything is OK, make the starting battery power on and controller will execute routine.

d) Press "start" button, engine will start. After pre-set start times, controller will send failed to start signal; then press "stop" button to reset controller.

e) Recover the action of stop engine start (e. g. Connect wire of fuel valve), and press start button again, then engine will start. If everything goes well, engine will go to normal running after idle running (if idle running is set). During this time, please observe engine's running situation.

f) If there is any other question, please contact SmartGen's service.

14 TYPICAL APPLICATION

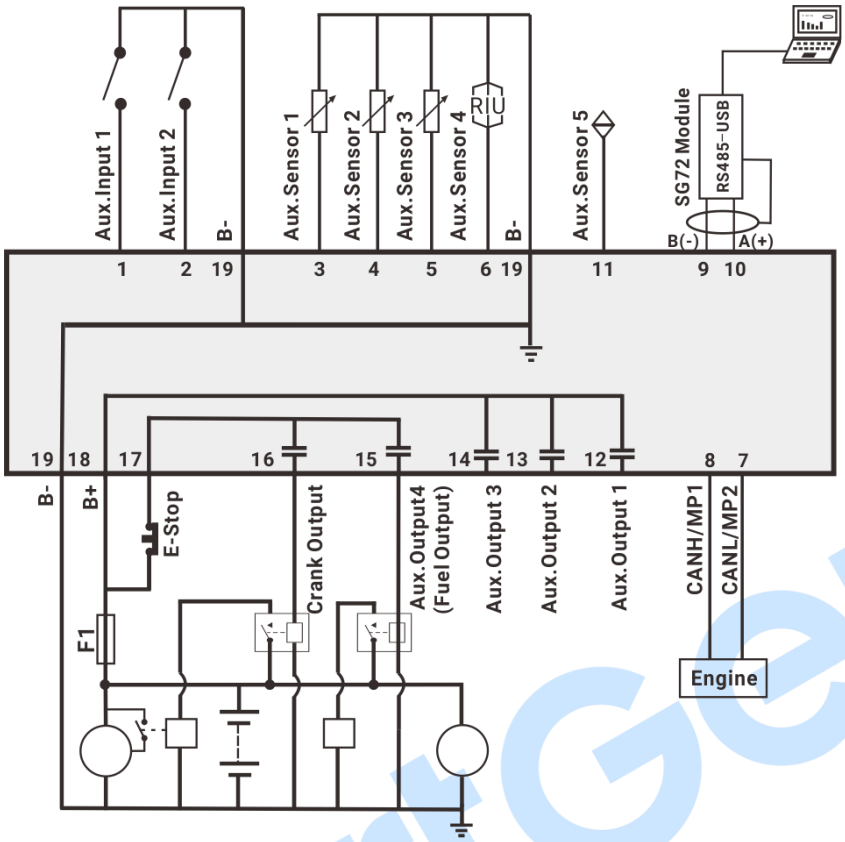

Fig.8 ACC1700/ACC1700CAN Typical Application Diagram

NOTE: After pressing the emergency stop button, the power of crank output and auxiliary output 4 will be disconnected. When doing configuration, please note that the function of ETS solenoid hold after stop should not be configured to the auxiliary output 4.

15 INSTALLATION

Controller is panel mounted design; and it is fixed with clips and screws for installation.

Unit: mm

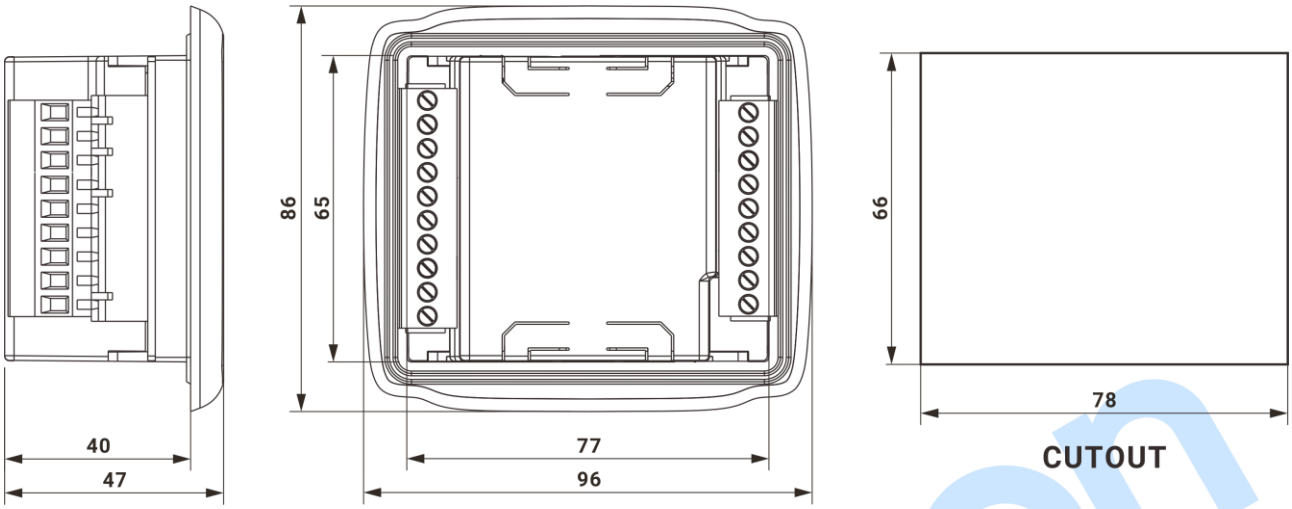

Fig.9 Overall & Cutout Dimensions

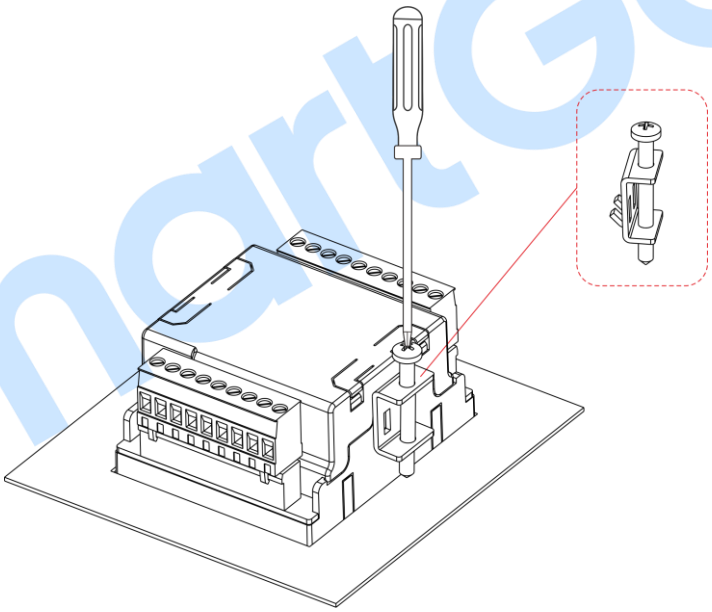

Fig.10 Clips Installation Diagram

— **BATTERY VOLTAGE INPUT:** ACC1700/ACC1700CAN controller can suit battery voltage environment of (8~35)VDC. Negative of battery must be connected with the engine shell. Diameter of wire which connects power supply B+ and B- with battery positive and negative must be over 1.5mm^2. If floating charger is configured, please firstly connect output wires of the charger to battery's positive and negative directly, then connect wires from battery's positive and negative to controller's positive and negative input ports to prevent charger disturbing the controller's normal working;

— **SPEED SENSOR INPUT:** Speed sensor is the magnetic equipment installed in the starter for detecting flywheel teeth. The connection wires with controller should apply 2-core shielded line. The shielded layer should be connected to ground terminal in the controller and another end

connects with nothing. The other two signal wires are connected to Terminal MP1 and MP2, and the Terminal MP2 has been connected with B- internally. The output voltage of speed sensor should be within (1~24)VAC (RMS) during the full speed range, and 12VAC is recommended (at rated speed). When speed sensor is installed, let the sensor spun to contacting flywheel first, then, port out 1/3 lap, and lock the nuts of sensor at last;

— **OUTPUT AND EXPANSION RELAYS:** All controller outputs are relay contact output type. If expansion relay is needed, please add freewheel diode to both ends of expansion relay's coils (when relay coils have DC current) or, increase resistance-capacitance return circuit (when relay coils have AC current), in order to prevent disturbance to the controller or other equipment.

SmartGen

16 CONNECTIONS OF CONTROLLER WITH J1939 ENGINE

16.1 CUMMINS QSL9

Suitable for CM850 engine control module; Engine type: CUMMINS-CM850.

Table 17 50-pin Connector

Terminals of controller	50 pins connector	Remarks
Auxiliary output 4 (Fuel relay output)	39	
Starting relay output	-	Connect to starter coil directly.

Table 18 9-pin Connector

Terminals of controller	9 pins connector	Remarks
-	SAE J1939 shield-E	CAN communication shielded line (connect with ECU terminal only).
CAN(H)	SAE J1939 signal-C	Using impedance 120Ω connecting line.
CAN(L)	SAE J1939 return-D	Using impedance 120Ω connecting line.

16.2 CUMMINS QSX15-CM570

Suitable for CM570 engine control module; Engine type is QSX15. Engine type: CUMMINS-CM570.

Table 19 50-pin Connector

Terminals of controller	50 pins connector	Remarks
Auxiliary output 4 (Fuel relay output)	38	Oil spout switch.
Starting relay output	-	Connect to starter coil directly.

Table 20 9-pin Connector

Terminals of controller	9 pins connector	Remarks
-	SAE J1939 shield-E	CAN communication shielded line (connect with ECU terminal only).
CAN(H)	SAE J1939 signal-C	Using impedance 120Ω connecting line.
CAN(L)	SAE J1939 return-D	Using impedance 120Ω connecting line.

SmartGen

16.3 CUMMINS QSZ13

Engine type: CUMMINS-QSZ13; Speed governing can be realized.

Table 21 Engine OEM Connector

Terminals of controller	OEM connector of engine	Remarks
Auxiliary output 4 (Fuel relay output)	45	
Starting relay output	-	Connect to starter coil directly.
Auxiliary output 3	16&41	Idle speed control, normally close output. Make 16 connected with 41 during high-speed running via external extended relay.
Auxiliary output 4	19&41	Pulse speed raising control, normally open output. Make 19 connected with 41 for 0.1s during warming up via external extended relay.
CAN(H)	1	Using impedance 120Ω connecting line.
CAN(L)	21	Using impedance 120Ω connecting line.

16.4 DEUTZ EMR2

Engine type: DEUTZ EMR2.

Table 22 F Connector

Terminals of controller	F connector	Remarks
Auxiliary output 4 (Fuel relay output)	Expansion 30A relay, providing battery voltage for 14; Fuse is 16A.	
Starting relay output	-	Connect to starter coil directly.
-	1	Connect to battery negative pole.
CAN(H)	12	Impedance 120Ω connecting line is recommended.
CAN(L)	13	Impedance 120Ω connecting line is recommended.

16.5 MTU ADEC (SMART MODULE)

Suitable for MTU engine with ADEC (ECU8) and SMART module; Engine type: MTU-ADEC.

Table 23 ADEC (X1 Port)

Terminals of controller	ADEC (X1port)	Remarks
Auxiliary output 4 (Fuel relay output)	X1 10	X1 Terminal 9 connected to negative of battery.
Starting relay output	X1 34	X1 Terminal 33 connected to negative of battery.

Table 24 ADEC (X4 Port)

Terminals of controller	SMART (X4 port)	Remarks
CAN(H)	X4 1	Using impedance 120Ω connecting line.
CAN(L)	X4 2	Using impedance 120Ω connecting line.

16.6 MTU ADEC (SAM MODULE)

Suitable for MTU engine with ADEC (ECU7) and SAM module; Engine type: MTU-ADEC-SAM.

Table 25 ADEC (X1 Port)

Terminals of controller	ADEC (X1port)	Remarks
Auxiliary output 4 (Fuel relay output)	X1 43	X1 Terminal 28 connected to negative of battery.
Starting relay output	X1 37	X1 Terminal 22 connected to negative of battery.

Table 26 SAM (X23 Port)

Terminals of controller	SAM (X23 port)	Remarks
CAN(H)	X23 2	Using impedance 120Ω connecting line.
CAN(L)	X23 1	Using impedance 120Ω connecting line.

16.7 PERKINS

Engine type: PERKINS-V.

Table 27 Connector

Terminals of controller	Connector	Remarks
Auxiliary output 4 (Fuel relay output)	1, 10, 15, 33, 34	
Starting relay output	-	Connect to starter coil directly.
CAN(H)	31	Using impedance 120Ω connecting line.
CAN(L)	32	Using impedance 120Ω connecting line.

16.8 VOLVO-EMS2

VOLVO Engine models are TAD734, TAD940, TAD941, TAD1640, TAD1641, and TAD1642. Engine type: VOLVO-EMS2. Speed regulating can be realized.

Table 28 Engine CAN Port

Terminals of controller	Engine's CAN port	Remarks
Auxiliary output 4 (Fuel relay output)	6	ECU stop; Set configurable output 1 to "ECU stop".
Starting relay output	5	ECU power; Set configurable output 2 to "ECU power".
	3	Negative power.
	4	Positive power.
CAN(H)	1(Hi)	Using impedance 120Ω connecting line.
CAN(L)	2(Lo)	Using impedance 120Ω connecting line.

NOTE: When this engine type is selected, preheating time should be set to at least 3 seconds.

16.9 YUCHAI

Suitable for Yuchai BOSCH common rail electronic-controlled engine. Engine type: YUCHAI; and speed regulating can be realized.

Table 29 Engine 42-pin Port

Terminals of controller	Engine 42 pins port	Remarks
Auxiliary output 4 (Fuel relay output)	1.40	Connect to engine ignition lock.
Starting relay output	-	Connect to starter coil directly.
CAN(H)	1.35	Using impedance 120Ω connecting line.
CAN(L)	1.34	Using impedance 120Ω connecting line.

Table 30 Engine 2-pin Port

Battery	Engine 2 pins	Remarks
Battery negative	1	Wire diameter 2.5mm^2.
Battery positive	2	Wire diameter 2.5mm^2.

16.10 WEICHAI

Suitable for Weichai BOSCH common rail electronic-controlled engine. Engine type: GTSC1; and speed regulating can be realized.

Table 31 Engine Port

Terminals of controller	Engine port	Remarks
Auxiliary output 4 (Fuel relay output)	1.40	Connect to engine ignition switch.
Starting relay output	1.61	
CAN(H)	1.35	Using impedance 120Ω connecting line.
CAN(L)	1.34	Using impedance 120Ω connecting line.

NOTE: If there is any question of connection between controller and ECU communication, please feel free to contact SmartGen's service personnel.

17 TROUBLESHOOTING

Table 32 Troubleshooting

Symptoms	Possible Solutions
Controller no response with power	Check starting battery; Check controller wirings; Check DC fuse.
Engine stop	Check water/cylinder temperature is too high; Check DC fuse.
Controller emergency stop	Check emergency stop button function is right or not; Check wire connection is open circuit or not.
Oil pressure low alarm after crank disconnection	Check oil pressure and its wire connections.
Water temp. high alarm after crank disconnection	Check water temperature sensor and its wire connections.
Shutdown alarm in running	Check related switch and wirings according to LCD information; Check auxiliary input ports.
Crank failure	Check fuel circuit and related wirings; Check starting battery; Check speed sensor and its wire connections; Refer to engine manual.
None response for starter	Check starter wire connections; Check starting battery.
RS485 communication abnormal	Check RS485 wire connections; Check RS485 COM port settings are correct or not; Check RS485 A and B are connected reversely or not; Check RS485 conversion module is damaged or not; Check PC communication port is damaged or not.
ECU communication failure	Check wire CAN high and CAN low polarity; Check 120Ω termination resistor is connected correctly or not; Check engine type is selected right or not; Check wire connection between controller and engine is right or not; output port settings are right or not.
ECU warning or shutdown	Refer to alarm screen to obtain information; If there is detailed alarm information, then check engine according to it; If there is not, refer to engine manual to obtain information according to SPN alarm code.

SmartGen